SPECS & DIMENSIONS

SWSI

BACKWARD INCLINED, SINGLE WIDTH FANS

WITH AIRFOIL (ACF), BACKWARD CURVED (BC), AND BACKWARD INCLINED (PLR) WHEEL DESIGNS

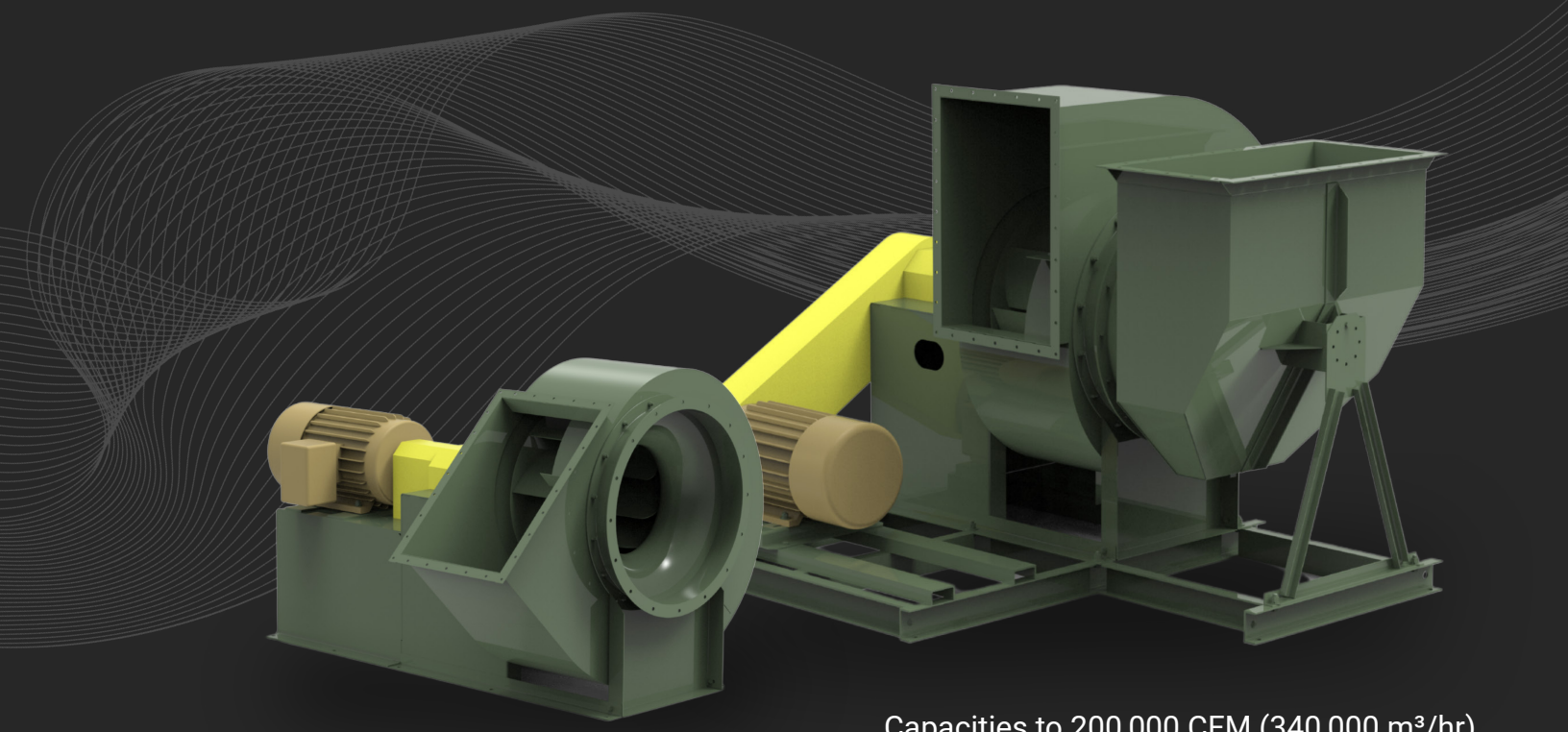

Capacities to 200,000 CFM (340,000 m³/hr)
Static Pressures to 20”WG (4,980 Pa)
Temperatures to 1000°F (538°C)
Class 1, 2, 3, & 4 Construction

nyb THE NEW YORK BLOWER COMPANY

DIMS-13000
November, 2026

FLANGE DIMENSIONS

FLANGED INLET

Flange mounted via bolted connection on fan housing. Holes are furnished on vertical centerline.

INLET FLANGE ANGLES:

Class 1, 2, & 3

Size 10-12 - 1.00" x 1.00" x 0.13"
Size 15-22 - 1.50" x 1.50" x 0.19"
Size 24-73 - 2.00" x 2.00" x 0.19"

Class 4

Size 18-22 - 1.50" x 1.50" x 0.19"
Size 24-89 - 2.00" x 2.00" x 0.19"

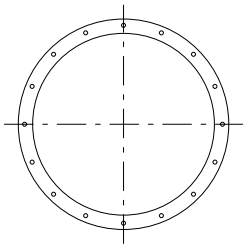

FLANGED OUTLET

Flange face mounted flush with outside edge of housing discharge. Holes are furnished on 4.00" centers from centerlines.

OUTLET FLANGE ANGLES OR MATERIAL GAUGE

Class 1, 2, & 3

Size 10-22* - 7 gauge plate
Size 24-33 - 1.50" x 1.50" x 0.19"

Class 4

Size 18-22* - 7 gauge plate
Size 24-33 - 1.50" x 1.50" x 0.19"
Size 36-89 - 2.00" x 2.00" x 0.19"

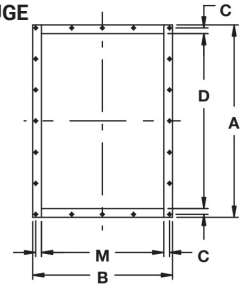

Special Alloy Construction and Down Blast Discharge (Arr.1, 3, 7, 8, & 9)

Sizes 12-15 - 1.00" x 1.00" x 0.13"
Sizes 18-22 - 1.25" x 1.25" x 0.19"

DIMENSIONS [Inches]					
Size	I.D.	B.C.	O.D.	Holes	
				No	Dia.
10	10.313	11.875	12.875	8	0.4375
12	13.500	14.625	15.500	8	0.4375
13	14.813	15.875	16.813	8	0.4375
15	16.375	17.875	19.375	8	0.4375
16	18.250	19.625	21.250	8	0.4375
18	20.000	21.750	23.000	16	0.5625
20	21.750	23.500	24.750	16	0.5625
22	24.375	26.125	27.375	16	0.5625
24	26.875	29.125	30.875	16	0.5625
27	29.500	31.750	33.500	16	0.5625
30	32.875	35.125	36.875	16	0.5625
33	36.125	38.375	40.125	16	0.5625
36	40.125	42.375	44.125	16	0.5625
40	43.875	46.125	47.875	24	0.5625
44	48.875	51.125	52.875	24	0.5625
49	53.875	56.125	57.875	24	0.5625
54	59.375	61.625	63.375	24	0.5625
60	66.125	68.375	70.125	32	0.5625
66	72.625	74.875	76.625	32	0.5625
73	80.625	82.875	84.625	32	0.5625
80	88.625	90.875	92.625	32	0.5625
89	97.625	99.875	101.625	32	0.5625

DIMENSIONS [Inches]							
Size	A†*	B†*	C†#	D†·	M†	Holes Per Flange	Hole Dia.
10	13.250	10.125	0.625	11.250	8.125	8	0.313
12	15.750	11.375	0.625	13.688	9.375	12	0.313
13	17.125	12.375	0.625	15.125	10.375	16	0.313
15	18.750	13.375	0.625	16.813	11.375	16	0.313
16	21.000	14.750	0.750	18.563	12.250	16	0.438
18	23.000	16.375	0.750	20.563	13.875	16	0.438
20	25.000	17.500	0.750	22.625	15.000	20	0.438
22	27.375	19.375	0.750	24.875	16.875	20	0.438
24	30.375	21.500	0.875	27.375	18.500	24	0.438
27	33.250	23.375	0.875	30.250	20.375	28	0.438
30	36.500	25.625	0.875	33.500	22.625	28	0.438
33	39.875	27.875	0.875	36.875	24.875	28	0.438
36	44.750	31.500	1.125	40.750	27.500	36	0.563
40	48.875	34.375	1.125	44.875	30.375	36	0.563
44	53.625	37.500	1.125	49.625	33.500	40	0.563
49	58.625	40.875	1.125	54.625	36.875	48	0.563
54	64.375	44.750	1.125	60.375	40.750	48	0.563
60	70.875	49.000	1.125	66.875	45.000	56	0.563
66	77.500	53.500	1.125	73.500	49.500	60	0.563
73	85.250	58.750	1.125	81.250	54.750	68	0.563
80	94.000	64.750	1.125	90.000	60.750	76	0.563
89	103.000	70.875	1.125	99.000	66.875	84	0.563

See Page 21 for Arr.4F (Flush Mount) Specifications
Tolerance: +/- 0.125".
Dimensions are nominal and may include rounded values.

**Materials of construction for mild steel only. A and B dimesions will vary in Sizes 12-22*
†Dimensions may vary slightly depending on class and with narrow-width construction
#C dimension on Arr. 4V, Sizes 10-15 subtract 0.062" | ·D dimension on Arr. 4V, Sizes 10-15 add 0.125"

MOTOR INFORMATION

ARRANGEMENT 4, 4F, 4H, & 4V MOTOR SIZE LIMITATIONS

Motor Availability			
Size	**Class 2**	**Class 3**	**Class 4**
10	56 - 182T*	-	-
12	56 - 182/4T*	-	-
13	143/5T - 182/4T	-	-
15	143/4T -213/5T	-	-
16	143/5T - 254/6T	143/5T - 254/6T	-
18	143/5T - 284/6TS	143/5T - 284/6TS	OA
20	182/4T - 284/6T	182/4T - 324TS*	182/4T - 324TS*
22	182/4T - 284/6T	182/4T - 364TS*	182/4T -364TS*
24	184T - 284/6T*	213/5T - 364/5T	213/5T - 364/5T
27	184T - 324/6T*	213/5T - 404/5TS*	213/5T - 404/5TS*
30	254/6T - 324/6T	254/6T - 324/6T	OA
33	254/6T - 324/6T	254/6T - 364/5T	OA
36	284/6T - 364/5T	324/6T - 404/5T	364/5T - 404/5T
40	324/6T - 404/5T	364/5T - 444/5T	364/5T - 444/5T
44	364/5T - 444/5T	404/5T - 447T	404/5T - 447T
49	404/5T - 444/5T	444/5T - 447T	444/5T - 447T

** Arrangement 4F, 4H, 4V fans use c-face motors. Some limitations on Arr. 4F/4H/4V fans*

OA - On Application

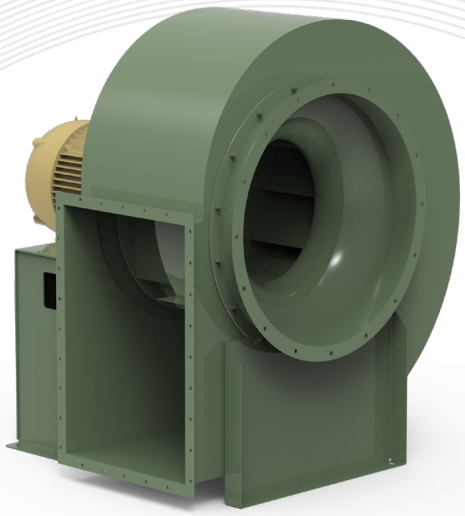

MOTOR INFORMATION

ARRANGEMENT 7 & 8 MOTOR PEDESTAL DIMENSIONS & SIZE LIMITATIONS

These approximate dimensions can be used to estimate the overall size of Arrangement 7 and 8 fans. Add the appropriate dimensions below to the fan dimensions on pages 12 and 13. *Note: Coupling gap is based on the Falk Steelflex coupling sizes shown. As the gap will vary with other coupling sizes and types, so will the Arrangement 7 & 8 motor pedestal dimensions. Specific motor and coupling data is required to determine exact dimensions.*

DIMENSIONS [Inches]								
Motor Frame Size	Coupling		0-0*		H-H*			
	Size	Gap	Min.	Max.	Open		TE	
					Min.	Max.	Min.	Max.
143-145T	30T	0.120	0.750	3.120	10.870	12.500	11.620	13.250
182-184T	40T	0.120	0.750	3.620	12.870	14.750	14.620	15.750
213-215T	50T	0.120	1.370	5.500	15.870	17.370	17.870	20.000
254-256T	60T	0.120	1.000	5.870	20.620	22.500	22.500	25.500
284-286T	70T	0.120	1.500	6.370	23.500	25.120	25.370	28.370
284-286TS	70T	0.120	1.500	6.500	22.120	23.750	24.125	27.120
324-326T	80T	0.120	1.000	6.750	26.120	27.750	28.250	31.870
324-326TS	80T	0.120	1.000	6.750	24.620	26.120	26.750	30.370
364-365T	90T	0.120	1.120	7.000	28.250	29.870	32.500	34.120
364-365TS	90T	0.120	1.620	7.000	26.620	27.620	30.370	32.000
404-405T	90T	0.120	2.370	8.750	32.620	34.250	37.370	39.000
404-405TS	90T	0.120	2.370	8.750	29.620	31.250	34.370	36.000
444-445T	100T	0.180	1.620	9.370	37.370	40.000	42.000	45.120
444-445TS	100T	0.180	2.120	9.370	34.120	36.250	38.370	41.370

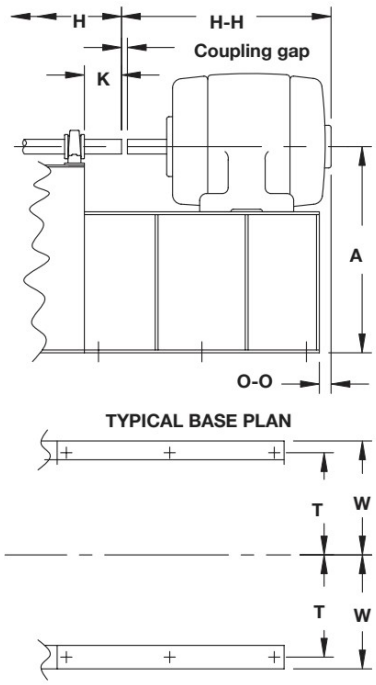

0-0 and H-H based on several major motor manufacturers. Consult **nyb for exact dimensions or custom sizes and construction.*

Dimensions are nominal and may include rounded values. Tolerance: +/- 0.125"

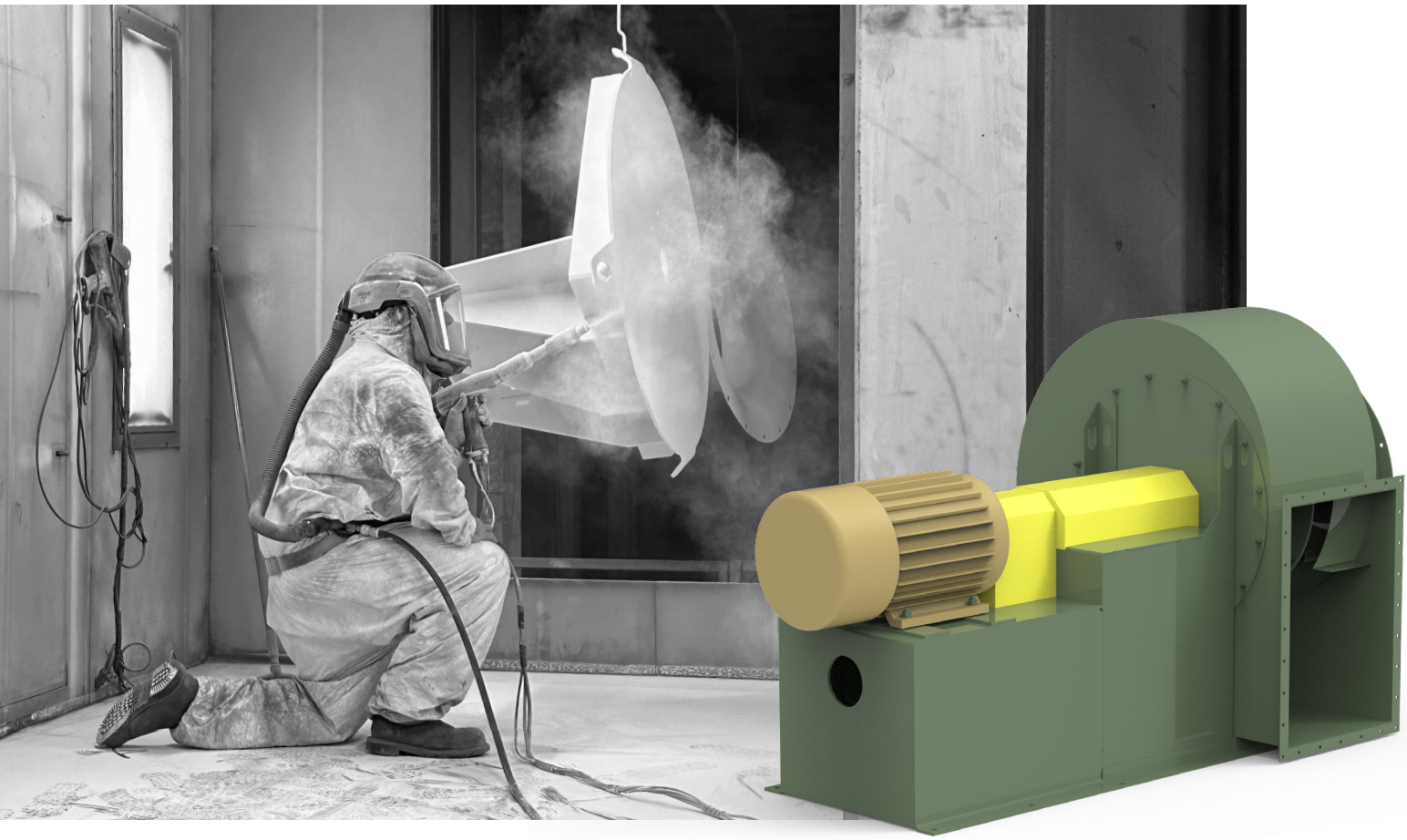

MOTOR INFORMATION

ARRANGEMENT 9 MOTOR SIZE LIMITATIONS

Arr. 9 is a space-efficient package consisting of fan, motor, V-belt drive, and accessories. Motors are mounted on the left or right side of the pedestal as space permits. C-NW is not a NEMA standard dimension and varies by manufacturer. As a result, C-NW must be checked in every instance. To determine if Arrangement 9 is a workable configuration, compare the desired motor frame size with the frame size shown for the appropriate fan below. If the frame size and C-NW dimension are no larger than that shown, the combination is satisfactory. If the C-NW dimension is larger, a different motor or arrangement must be selected.

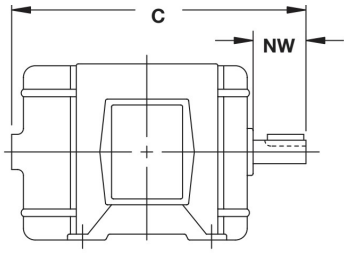

Class 1						
	Standard Fans			Heat Fans		
	Max. C-NW	Frame Size		Max. C-NW	Frame Size	
		TEFC	ODP		TEFC	ODP
12	12.50	145T	145T	11.25	145T	145T
15	13.50	184T	184T	12.25	145T	184T
18	13.56	184T	213T	12.31	145T	184T
22	16.81	215T	254T	15.56	213T	215T
24	16.94	215T	254T	15.69	213T	215T
27	20.44	254T	256T	19.19	215T	256T
30	20.44	254T	284T	19.19	215T	256T
33	22.19	256T	284T	20.94	254T	286T
36	22.25	256T	284T	21.00	254T	286T
40	27.75	326T	405T	26.50	326T	365T
44	27.75	326T	405T	26.50	326T	365T
49	29.25	365T	405T	28.00	365T	405T
54	29.25	365T	405T	28.00	365T	405T
60	29.25	365T	405T	28.00	365T	405T
66	32.75	405T	405T	31.50	365T	405T
73	32.75	405T	405T	31.50	365T	405T

Class 2						
Size	Standard Fans			Heat Fans		
	Max. C-NW	Frame Size		Max. C-NW	Frame Size	
		TEFC	ODP		TEFC	ODP
12	13.50	145T	145T	12.25	145T	145T
15	15.31	184T	184T	14.06	184T	184T
18	16.81	213T	215T	15.56	213T	215T
22	20.44	215T	284T	19.19	215T	256T
24	22.19	256T	286T	20.94	254T	286T
27	22.94	256T	326T	21.69	256T	286T
30	24.50	324T	365T	23.25	284T	326T
33	27.75	326T	405T	26.50	324T	365T
36	27.81	364T	405T	26.56	326T	365T
40	29.25	365T	405T	28.00	365T	405T
44	32.75	405T	405T	31.50	365T	405T
49	32.75	405T	405T	31.50	365T	405T
54	37.75	405T	405T	36.50	405T	405T
60	37.75	405T	405T	36.50	405T	405T
66	37.75	405T	405T	36.50	405T	405T
73	46.75	405T	405T	45.50	405T	405T

Class 3						
Size	Standard Fans			Heat Fans		
	Max. C-NW	Frame Size		Max. C-NW	Frame Size	
		TEFC	ODP		TEFC	ODP
12	-	-	-	-	-	-
15	-	-	-	-	-	-
18	15.50	213T	215T	14.25	184T	213T
22	20.25	254T	256T	19.00	215T	256T
24	21.25	254T	286T	20.00	254T	256T
27	22.25	256T	286T	21.00	254T	286T
30	25.00	324T	365T	23.75	286T	326T
33	27.50	326T	405T	26.25	326T	365T
36	23.88	326T	365T	22.63	324T	365T
40	27.00	326T	405T	25.75	324T	365T
44	30.00	365T	405T	28.75	365T	405T
49	33.00	405T	405T	31.75	405T	405T
54	36.00	405T	405T	34.75	405T	405T
60	41.00	405T	405T	39.75	405T	405T
66	44.00	405T	405T	42.75	405T	405T
73	49.00	405T	405T	47.75	405T	405T

Motors of 326T frame and larger should be checked for weight. Arrangement 9 fans can accommodate motors weighing up to 600 lbs with standard base. Arrangement 9 fans provisioned with heavy duty slide rails can accommodate motors weighing up to 1000 lbs. Arrangement 1 fans with unitary bases are required for motors weighing more than 1000 lbs.
Dimensions are nominal and may include rounded values. Consult certified drawing packages to confirm exact dimensions.

Tolerance: ± 0.125"

MAKE YOUR SWSI FAN SELECTION

New York Blower's intuitive fan selection program, Fan-To-Size, helps you start your next project by easily selecting the fan that best suits your application and installation needs. With no login or account information required, select a fan from a list of all nyb products or based on categories like Clean Air, Moisture, Light Dust, Heavy Dust, and Bulk Material Handling.Visit our website to start your industiral fan selection: **https://apps.nyb.com/FanToSize/**

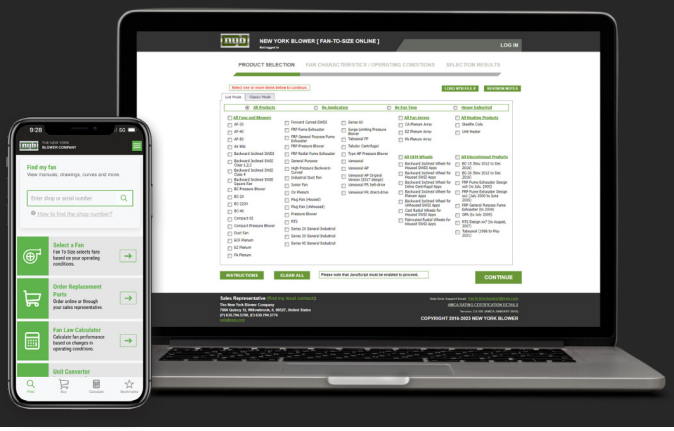

DIMENSIONS: ARR. 1, 8, & 9

ALL SIZES

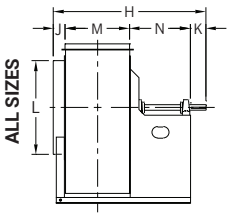

CLASS 1, 2 | SIZES 12-36
CLASS 3, 4 | SIZES 18-33

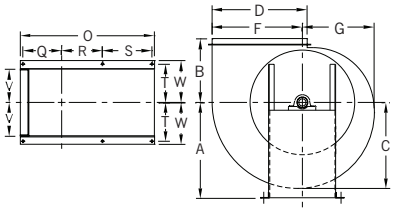

CLASS 1, 2 | SIZES 40-89
CLASS 3, 4 | SIZES 36-89

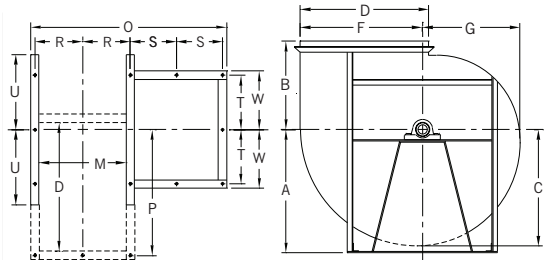

Size	A												B		C	D		
	TH / TAD			BH / BAU			UB / TAU			DB			*	TAD		Class 1, 2	Class 3	Class 4
	Class 1, 2	Class 3	Class 4	Class 1, 2	Class 3	Class 4	Class 1, 2	Class 3	Class 4	Class 1, 2	Class 3	Class 4						
10	-	-	12.000	-	-	12.000	-	-	12.000	-	-	8.500	8.500	10.125	11.188	-	-	-
12	-	-	15.500	-	-	15.500	-	-	15.500	-	-	10.000	10.000	12.375	13.625	-	-	-
13	-	-	15.500	-	-	15.500	-	-	15.500	-	-	11.000	11.000	13.563	15.063	-	-	-
15	-	-	17.500	-	-	17.500	-	-	17.500	-	-	12.000	12.000	15.125	16.750	-	-	-
16	19.250	-	19.250	19.250	-	19.250	19.250	-	19.250	19.250	-	13.000	13.000	16.625	18.500	18.500	-	-
18	21.750	21.750	21.250	21.750	21.750	21.250	21.750	21.750	21.250	21.750	21.750	14.000	14.000	18.500	20.500	20.500	20.500	20.500
20	23.250	23.250	23.250	23.250	23.250	23.250	23.250	23.250	23.250	23.250	23.250	15.500	15.500	20.313	22.563	22.563	22.563	22.563
22	26.000	26.000	25.500	26.000	26.000	25.500	26.000	26.000	25.500	26.000	26.000	17.000	17.000	22.500	24.875	24.875	24.875	24.875
24	28.625	28.625	28.000	28.625	28.625	28.000	28.625	28.625	28.000	28.625	28.625	19.000	19.000	24.750	27.375	27.375	27.375	27.375
27	31.125	31.125	30.500	31.125	31.125	30.500	31.125	31.125	30.500	31.125	31.125	20.500	20.500	27.250	30.250	30.250	30.250	30.250
30	34.750	34.750	33.750	34.750	34.750	33.750	34.750	34.750	33.750	34.750	34.750	22.500	22.500	30.375	33.500	33.500	33.500	33.500
33	37.750	37.750	37.000	37.750	37.750	37.000	37.750	37.750	37.000	37.750	37.750	24.500	24.500	33.375	36.875	36.875	36.875	36.875
36	33.000	33.000	42.000	42.000	42.000	42.000	39.000	39.000	42.000	29.000	29.000	29.000	29.000	36.875	40.750	40.750	40.750	40.750
40	36.000	36.000	46.000	46.000	46.000	43.000	43.000	43.000	31.000	31.000	31.000	31.000	45.250	40.750	44.875	44.875	44.875	44.875
44	40.000	40.000	50.000	50.000	50.000	47.000	47.000	47.000	33.500	33.500	33.500	33.500	49.000	45.000	49.625	49.625	49.625	49.625
49	43.500	43.500	55.000	55.000	55.000	51.500	51.500	51.500	36.000	36.000	36.000	36.000	53.250	49.500	54.625	54.625	54.625	54.625
54	48.000	48.000	60.500	60.500	60.500	57.000	57.000	57.000	40.000	40.000	40.000	40.000	58.750	54.875	60.375	60.375	60.375	60.375
60	53.000	53.000	66.500	66.500	66.500	62.500	62.500	62.500	43.000	43.000	43.000	43.000	64.500	60.750	66.875	66.875	66.875	66.875
66	58.000	58.000	73.000	73.000	73.000	69.000	69.000	69.000	47.000	47.000	47.000	47.000	70.250	66.750	73.500	73.500	73.500	73.500
73	64.000	64.000	80.500	80.500	80.500	76.000	76.000	76.000	51.500	51.500	51.500	51.500	76.500	73.875	81.250	81.250	81.250	81.250
80	71.000	-	89.000	89.000	-	84.000	84.000	-	57.000	57.000	-	57.000	82.000	81.688	90.000	90.000	-	-
89	78.000	-	98.000	98.000	-	92.500	92.500	-	63.000	63.000	-	63.000	88.000	90.125	99.000	99.000	-	-

Dimensions are nominal and may include rounded values. Consult certified drawing packages to confirm exact dimensions. *Tolerance: ± 0.125"*

ACCESS GP DRAWINGS ON DEMAND

Drawings on Demand can generate fan drawing packages specifically tailored to the user's application requirements. Included are the abilities to select the fan's rotation, discharge position, accessories, motor frame size, and unitary base. Once selected, a complete drawing package will be available. Visit our website to access tailored drawing packages: **https://apps.nyb.com/drawingsondemand/**

- *No software to download*
- *Upload selections from Fan-To-Size*
- *File types include DWG, PDF, & STP*
- *Choose from a wide selection of accessories*
- *Options to add customer information to drawings*

DIMENSIONS: ARR. 1, 8, & 9

Size	F			G	H†				J			K			L		
	Class 1, 2	Class 3	Class 4		Class 1	Class 2	Class 3	Class 4	Class 1, 2	Class 3	Class 4	Class 1, 2, 3	Class 3	Class 4	Class 1, 2	Class 3	Class 4
10	10.625	-	-	8.500	25.750	26.750	-	-	2.125	-	-	2.500	-	-	10.500	-	-
12	13.000	-	-	10.375	27.563	28.563	-	-	2.125	-	-	2.500	-	-	13.500	-	-
13	14.250	-	-	11.375	29.500	30.500	-	-	2.125	-	-	3.000	-	-	14.875	-	-
15	15.875	-	-	12.750	32.063	33.813	-	-	3.125	-	-	3.000	-	-	16.500	-	-
16	17.500	17.500	-	13.938	33.438	35.875	35.125	-	3.125	3.125	-	3.500	4.000	-	18.625	19.000	-
18	19.375	19.375	19.375	15.500	35.063	38.313	37.500	35.500	3.125	3.125	3.125	3.500	4.000	4.500	20.000	20.750	20.750
20	21.313	21.375	21.375	17.000	38.125	41.875	41.625	39.375	3.125	3.125	3.125	4.000	4.500	5.000	22.375	22.500	22.500
22	23.625	23.625	23.625	18.875	41.813	45.438	45.750	43.500	3.125	3.125	3.125	4.000	4.500	5.000	24.500	25.125	25.125
24	26.000	26.000	26.000	20.750	45.063	50.313	49.875	47.625	4.125	4.125	4.125	4.500	5.000	5.500	27.000	27.625	27.625
27	28.625	28.625	28.625	22.875	50.938	53.438	53.250	52.000	4.125	4.125	4.125	5.000	5.500	6.000	30.000	30.250	30.250
30	31.875	31.813	31.813	25.375	53.688	57.750	58.750	57.250	4.125	4.125	4.125	5.500	6.000	6.500	33.000	33.625	33.625
33	35.000	35.063	35.063	28.000	58.188	63.750	64.000	62.500	4.125	4.125	4.125	6.000	6.500	7.000	36.500	36.875	36.875
36	38.750	38.750	38.750	30.875	62.313	67.875	66.500	67.000	5.000	5.000	5.000	6.500	6.625	7.125	40.000	41.000	41.000
40	42.688	42.750	42.750	34.125	73.125	74.625	72.875	73.375	5.000	5.000	5.000	6.750	7.125	7.625	44.750	44.750	44.750
44	47.125	47.188	47.188	37.750	76.750	81.750	79.500	80.000	5.000	5.000	5.000	7.250	7.625	8.125	49.750	49.750	49.750
49	51.938	52.000	52.000	41.500	82.125	85.625	86.375	86.875	5.000	5.000	5.000	7.750	8.125	8.625	54.750	54.750	54.750
54	57.500	57.563	57.563	45.875	88.500	97.000	95.750	96.250	6.000	6.000	6.000	8.250	8.625	9.125	60.250	60.250	60.250
60	63.625	63.688	63.688	50.875	93.250	101.750	105.500	106.000	6.000	6.000	6.000	8.750	9.125	9.625	67.000	67.000	67.000
66	69.938	70.000	70.000	56.000	103.750	108.750	115.500	116.000	7.000	7.000	7.000	9.250	9.625	10.125	73.500	73.500	73.500
73	77.375	77.438	77.438	61.875	109.500	123.500	126.250	126.750	7.000	7.000	7.000	9.625	10.125	10.625	81.500	81.500	81.500
80	85.688	85.688	-	68.375	120.250	135.250	138.750	-	7.000	7.000	-	10.500	11.000	-	89.500	89.500	-
89	94.500	94.500	-	75.438	130.875	147.875	151.375	-	7.000	7.000	-	11.000	11.500	-	98.500	98.500	-

Size	M†	N				P/Q†		R†			S				T
		Class 1	Class 2	Class 3	Class 4	Class 1, 2	Class 3, 4	Class 1. 2	Class 3	Class 4	Class 1	Class 2	Class 3	Class 4	
10	8.125	13.000	14.000	-	-	6.130	-	5.188	-	-	10.875	11.875	-	-	6.375
12	9.375	13.563	14.563	-	-	-	-	5.813	-	-	11.438	12.438	-	-	7.375
13	10.375	14.000	15.000	-	-	7.130	-	6.313	-	-	11.875	12.875	-	-	7.875
15	11.375	14.563	16.313	-	-	-	-	6.813	-	-	12.438	14.188	-	-	8.875
16	12.250	14.563	17.000	15.750	-	8.630	8.750	7.500	7.750	-	11.938	14.375	12.625	-	9.375
18	13.875	14.563	17.813	16.500	14.000	-	-	8.313	8.563	8.563	11.938	15.188	13.375	10.875	9.375
20	15.000	16.000	19.750	19.000	16.250	10.130	10.250	8.875	9.125	9.125	13.375	17.125	15.875	13.125	9.375
22	16.875	17.813	21.438	21.250	18.500	11.380	11.500	9.813	10.063	10.063	15.188	18.813	18.125	15.375	10.875
24	18.500	17.938	23.188	22.250	19.500	12.380	12.500	10.875	11.375	11.375	14.813	20.063	18.125	15.375	12.250
27	20.375	21.438	23.938	23.250	21.500	13.500	13.630	11.813	12.313	12.313	18.313	20.813	19.125	17.375	13.625
30	22.625	21.438	25.500	26.000	24.000	14.630	14.750	12.938	13.438	13.438	18.313	22.375	21.875	19.875	13.625
33	24.875	23.188	28.750	28.500	26.500	15.880	40.250	14.063	14.563	14.563	20.063	25.625	24.375	22.375	16.000
36	27.500	23.250	28.813	27.375	27.375	44.250	44.250	15.438	15.250	15.250	20.063	25.625	13.500	13.500	16.000
40	30.375	31.000	32.625	30.375	30.375	48.630	48.750	16.688	16.688	16.688	15.375	16.125	15.000	15.000	19.000
44	33.500	31.000	36.125	33.375	33.375	53.500	53.500	18.250	18.250	18.250	15.375	17.875	16.500	16.500	21.000
49	36.875	32.500	36.125	36.375	36.375	59.500	59.630	19.938	19.938	19.938	16.125	17.875	18.000	18.000	23.000
54	40.750	33.500	42.125	40.375	40.375	65.630	65.750	22.375	22.375	22.375	16.625	20.875	20.000	20.000	25.000
60	45.000	33.500	42.125	45.375	45.375	72.500	72.500	24.500	24.500	24.500	16.625	20.875	22.500	22.500	26.500
66	49.500	38.000	43.125	49.375	49.375	79.880	80.000	27.250	27.250	27.250	18.875	21.375	24.500	24.500	29.000
73	54.750	38.125	52.125	54.375	54.375	88.250	88.250	29.875	29.875	29.875	16.563	23.563	24.688	24.688	33.500
80	60.750	42.000	57.000	60.000	-	97.000	97.000	32.875	32.875	-	18.500	26.000	27.500	-	36.750
89	66.875	46.000	63.000	66.000	-	-	-	35.938	35.938	-	20.500	29.000	30.500	-	40.250

Dimensions are nominal and may include rounded values. Consult certified drawing packages to confirm exact dimensions.

Tolerance: ± 0.125"

DIMENSIONS: ARR. 1, 8, & 9

ALL SIZES

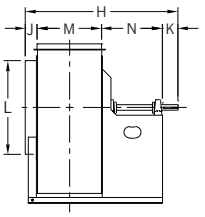

CLASS 1, 2 | SIZES 12-36
CLASS 3, 4 | SIZES 18-33

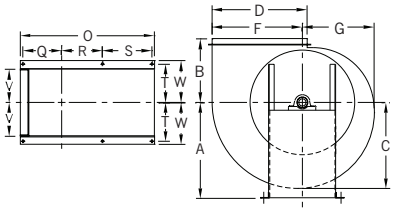

CLASS 1, 2 | SIZES 40-89
CLASS 3, 4 | SIZES 36-89

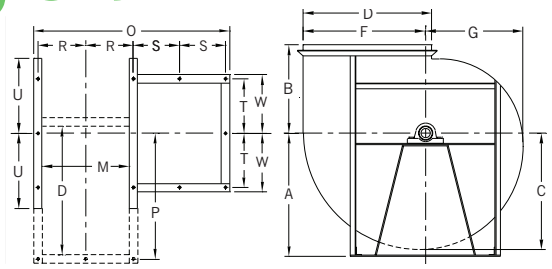

Size	U			V	W	Base Holes		
	Class 1, 2	Class 3	Class 4	Class 1, 2		Class 1, 2	Class 3	Class 4
10	-	-	-	5.500	7.000	0.563	-	-
12	-	-	-	6.500	8.000	0.563	-	-
13	-	-	-	7.000	8.500	0.563	-	-
15	-	-	-	8.000	9.500	0.563	-	-
16	-	10.625	-	8.250	10.250	0.563	0.563	-
18	-	10.875	10.875	8.250	10.250	0.563	0.563	0.563
20	-	11.125	11.125	8.250	10.250	0.563	0.563	0.563
22	9.750	12.625	12.625	9.750	11.750	0.563	0.563	0.563
24	11.000	14.375	14.375	11.000	13.000	0.750	0.750	0.750
27	11.750	15.500	15.500	11.750	14.750	0.750	0.750	0.750
30	11.750	16.875	16.875	11.750	14.750	0.750	0.750	0.750
33	14.000	18.250	18.250	14.000	17.000	0.750	0.750	0.750
36	14.000	24.500	24.500	14.000	17.000	0.750	0.875	0.875
40	26.250	26.250	26.250	17.500	20.500	0.875	0.875	0.875
44	28.750	28.750	28.750	19.500	22.500	0.875	0.875	0.875
49	31.250	31.250	31.250	21.500	24.500	0.875	0.875	0.875
54	35.000	35.000	35.000	23.000	27.000	1.000	1.000	1.000
60	38.500	38.500	38.500	24.500	28.500	1.000	1.000	1.000
66	42.250	42.250	42.250	26.500	31.500	1.000	1.000	1.000
73	46.250	46.250	44.500	31.000	36.000	1.000	1.000	1.000
80	50.000	50.000		-	39.250	1.000	1.000	
89	54.875	54.875		-	42.750	1.000	1.000	

** is for TH, BH, UB, DB, BAU and TAU discharge*
† Dimensions may vary with narrow-width construction
J is for housing side over inlet collar
L, M, and D are outside dimensions

Dimensions are nominal and may include rounded values. Consult certified drawing packages to confirm exact dimensions.
Tolerance: ± 0.125"

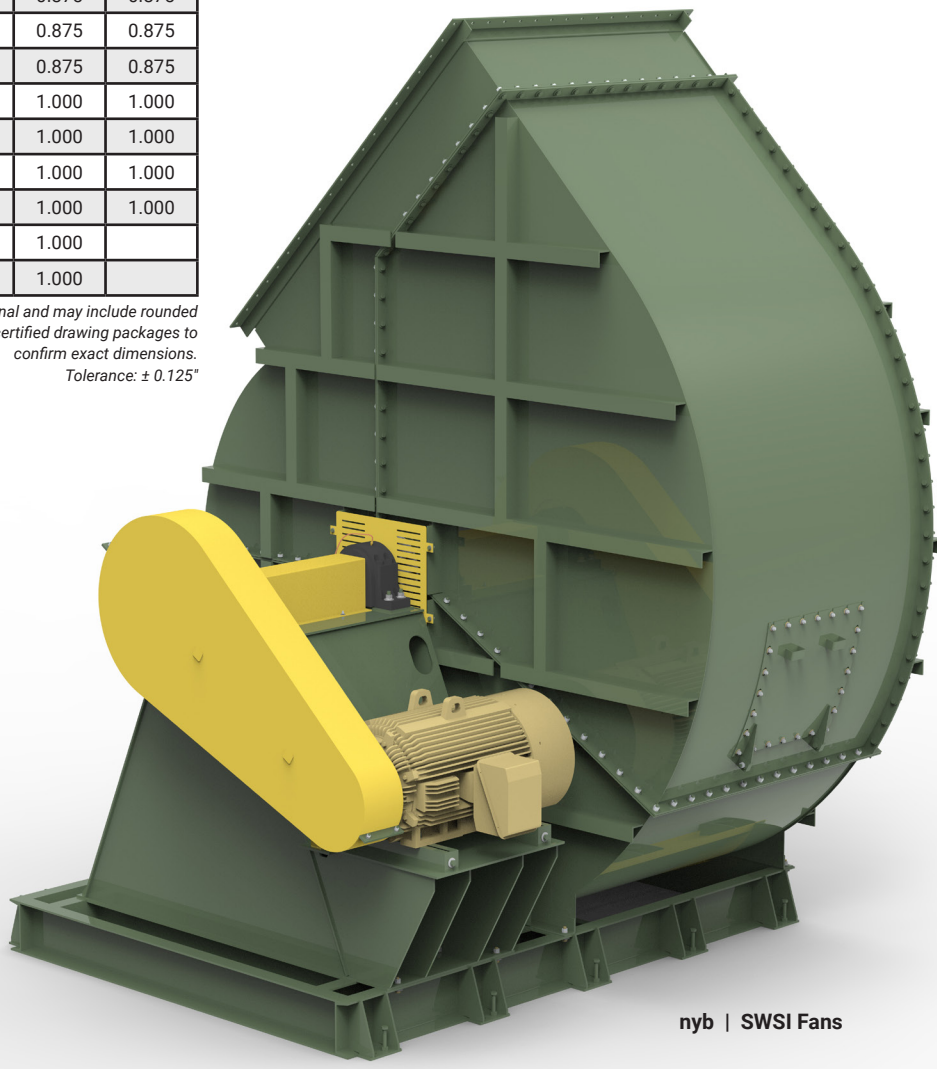

DIMENSIONS: ARR. 3

ALL SIZES

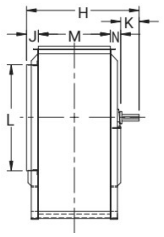

CLASS 1, 2, 3 | SIZES 24-33
CLASS 4 | SIZES 30-33

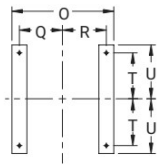

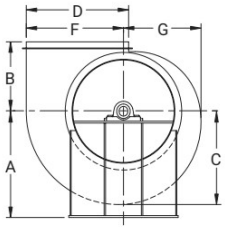

CLASS 1, 2, 3 | SIZES 36-89
CLASS 4 | SIZES 36-73

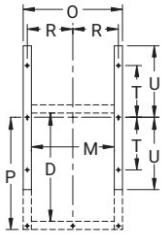

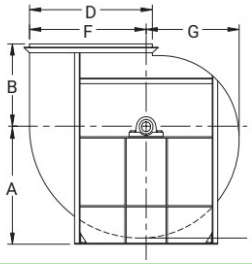

Size	A				B		C	D	F	G	H			
	TH TAD	BH BAU	UB TAU	DB	*	TAD					Class 1	Class 2	Class 3	Class 4
24	28.000	28.000	28.000	28.000	19.000	19.000	24.750	27.375	26.000	20.750	29.750	29.750	30.500	-
27	30.500	30.500	30.500	30.500	20.500	20.500	27.250	30.250	28.625	22.875	32.125	32.125	32.875	-
30	33.750	33.750	33.750	33.750	22.500	22.500	30.375	33.500	31.813	25.375	34.875	34.875	35.875	36.375
33	37.000	37.000	37.000	37.000	24.500	24.500	33.375	36.875	35.000	28.000	38.625	38.625	40.625	41.125
36	33.000	42.000	39.000	29.000	29.000	41.750	36.875	40.750	38.688	30.875	43.000	43.000	44.500	45.000
40	36.000	46.000	43.000	31.000	31.000	45.250	40.750	44.875	42.688	34.125	47.375	47.375	49.875	49.375
44	40.000	50.000	47.000	33.500	33.500	49.000	45.000	49.625	47.125	37.750	51.000	53.000	53.500	53.000
49	43.500	55.000	51.500	36.000	36.000	53.250	49.500	54.625	51.938	41.500	54.875	56.875	57.375	57.875
54	48.000	60.500	57.000	40.000	40.000	58.750	54.875	60.375	57.500	45.875	60.250	61.250	61.750	62.250
60	53.000	66.500	62.500	43.000	43.000	64.500	60.750	66.875	63.625	50.875	65.000	66.000	66.500	67.000
66	58.000	73.000	69.000	47.000	47.000	70.250	66.750	73.500	69.938	56.000	71.000	71.000	71.500	72.000
73	64.000	80.500	76.000	51.500	51.500	76.500	73.875	81.250	77.375	61.875	78.750	78.750	81.250	81.750
80	71.000	89.000	84.000	57.000	57.000	82.000	81.688	90.000	85.688	68.375	87.250	87.250	88.750	-
89	78.000	98.000	92.500	63.000	63.000	88.000	90.125	99.000	94.500	75.438	93.875	93.875	95.375	-

Size	J	K			L	M	N				O	P/Q		R
		Class 1, 2	Class 3	Class 4			Class 1	Class 2	Class 3	Class 4		Class 1, 2, 3	Class 4	
24	4.125	4.500	4.750	-	27.625	18.500	2.625	2.625	3.125	-	27.000	11.500	-	11.438
27	4.125	5.000	5.250	-	30.250	20.375	2.625	2.625	3.125	-	28.875	12.500	-	12.375
30	4.125	5.250	6.000	6.500	33.625	22.625	2.875	2.875	3.125	3.125	31.125	13.630	13.620	13.500
33	5.125	5.750	6.500	7.000	36.875	24.875	2.875	2.875	4.125	4.125	33.375	14.750	14.750	14.625
36	6.000	6.500	7.000	7.500	41.000	27.500	3.000	3.000	4.000	4.000	33.500	40.250	40.250	15.250
40	7.000	7.000	7.500	8.000	44.750	30.375	3.000	3.000	5.000	4.000	36.375	44.250	44.250	16.688
44	7.000	7.500	8.000	8.500	49.750	33.500	3.000	5.000	5.000	4.000	39.500	48.630	48.620	18.250
49	7.000	8.000	8.500	9.000	54.750	36.875	3.000	5.000	5.000	5.000	42.875	53.500	53.500	19.938
54	7.000	8.500	9.000	9.500	60.250	40.750	4.000	5.000	5.000	5.000	48.750	59.500	59.500	22.375
60	7.000	9.000	9.500	10.000	67.000	45.000	4.000	5.000	5.000	5.000	53.000	65.630	65.750	24.500
66	7.000	9.500	10.000	10.500	73.500	49.500	5.000	5.000	5.000	5.000	59.500	72.500	72.500	27.250
73	9.000	10.000	10.500	11.000	81.500	54.750	5.000	5.000	7.000	7.000	64.750	79.880	80.000	29.875
80	9.000	10.500	11.000	-	89.500	60.750	7.000	7.000	8.000	-	70.750	32.880	-	32.875
89	9.000	11.000	11.500	-	98.500	66.875	7.000	7.000	8.000	-	76.875	35.310	-	35.938

Size	T	U	Base Holes
24	12.250	14.375	0.750
27	13.625	15.500	0.750
30	14.875	16.875	0.750
33	16.000	18.250	0.750
36	17.500	24.500	0.875
40	19.000	26.250	0.875

Size	T	U	Base Holes
44	21.000	28.750	0.875
49	23.000	31.250	0.875
54	25.000	35.000	1.000
60	26.500	38.500	1.000
66	29.000	42.250	1.000
73	33.500	46.250	1.000

Size	T	U	Base Holes
80	36.750	50.000	1.000
89	40.250	54.875	1.000

** is for TH, BH, UB, DB, BAU and TAU discharge*
J is for housing side over inlet collar
L, M, and D are outside dimensions

Dimensions are nominal and may include rounded values. Consult certified drawing packages to confirm exact dimensions.
Tolerance: ± 0.125"

DIMENSIONS: ARR. 4

CLASS 2 | SIZES 10-33, 36

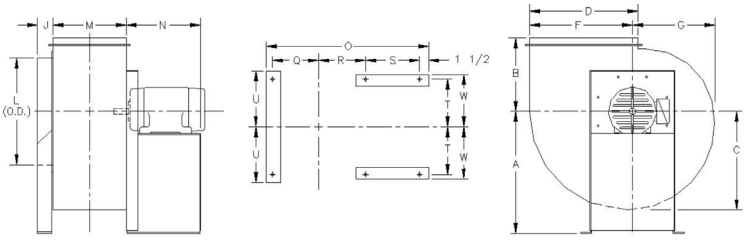

CLASS 3 & 4 | SIZES 36-49

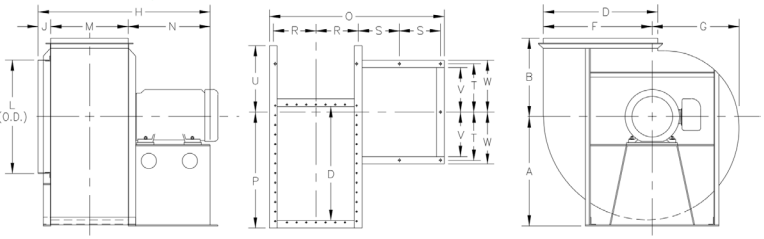

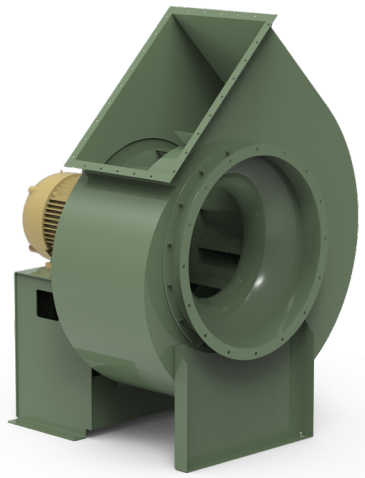

Size	Frame	A	B			C	D	F	G	J	L		M†	N
			#	TAD	DB						CL.2	CL.3/4		
10	56	12.000	8.500	10.500	12.000	10.125	11.188	10.625	8.500	2.125	10.500	-	8.125	9.813
	143/5T	12.000	8.500	10.500	12.000	10.125	11.188	10.625	8.500	2.125	10.500	-	8.125	9.813
	182T	13.000	8.500	10.500	12.000	10.125	11.188	10.625	8.500	2.125	10.500	-	8.125	9.813
12	56	15.500	10.000	13.000	15.500	12.375	13.625	12.938	10.313	2.125	13.500	-	9.375	10.813
	143/5T	15.500	10.000	13.000	15.500	12.375	13.625	12.938	10.313	2.125	13.500	-	9.375	10.813
	182/4T	16.500	10.000	13.000	16.500	12.375	13.625	12.938	10.313	2.125	13.500	-	9.375	10.813
13	143/5T	15.500	11.000	15.000	15.500	13.625	15.063	14.250	11.375	2.125	14.875	-	10.375	10.813
	182/4T	16.500	11.000	15.000	16.500	13.625	16.063	14.250	11.375	2.125	14.875	-	10.375	10.813
15	143/5T	17.500	12.000	16.000	17.500	15.125	16.750	15.813	12.625	3.125	16.500	-	11.375	13.125
	182/4T	18.500	12.000	16.000	18.500	15.125	16.750	15.813	12.625	3.125	16.500	-	11.375	13.125
	213/5T	19.250	12.000	16.000	19.250	15.125	16.750	15.813	12.625	3.125	16.500	-	11.375	13.125
16	143/5T	19.250	13.000	17.000	19.250	16.625	18.500	17.500	13.938	3.125	18.625	19.000	12.250	13.125
	182/4T	20.250	13.000	17.000	20.250	16.625	18.500	17.500	13.938	3.125	18.625	19.000	12.250	13.125
	213/5T	21.000	13.000	17.000	21.000	16.625	18.500	17.500	13.938	3.125	18.625	19.000	12.250	13.125
	254/6T	21.000	13.000	17.000	21.000	16.625	18.500	17.500	13.938	3.125	18.625	19.000	12.250	18.375
18	143/5T	21.250	14.000	18.000	21.250	18.375	20.500	19.375	15.375	3.125	20.000	20.750	13.875	18.375
	182/4T	21.250	14.000	18.000	21.250	18.375	20.500	19.375	15.375	3.125	20.000	20.750	13.875	18.375
	213/5T	22.000	14.000	18.000	22.000	18.375	20.500	19.375	15.375	3.125	20.000	20.750	13.875	18.375
	254/6T	23.000	14.000	18.000	23.000	18.375	20.500	19.375	15.375	3.125	20.000	20.750	13.875	18.375
	284/6T	23.750	14.000	18.000	23.750	18.375	20.500	19.375	15.375	3.125	20.000	20.750	13.875	18.375
	284/6TS	23.750	14.000	18.000	23.750	18.375	20.500	19.375	15.375	3.125	20.000	20.750	13.875	18.375
20	182/4T	23.250	15.500	19.500	23.250	20.375	22.500	21.375	17.000	3.125	22.375	22.500	15.000	18.375
	213/5T	24.000	15.500	19.500	24.000	20.375	22.500	21.375	17.000	3.125	22.375	22.500	15.000	18.375
	254/6T	25.000	15.500	19.500	25.000	20.375	22.500	21.375	17.000	3.125	22.375	22.500	15.000	18.375
	284/6T	25.750	15.500	19.500	25.750	20.375	22.500	21.375	17.000	3.125	22.375	22.500	15.000	18.375
	284/6TS	25.750	15.500	19.500	25.750	20.375	22.500	21.375	17.000	3.125	22.375	22.500	15.000	18.375
	324TS	23.250	15.500	19.500	23.250	20.375	22.500	21.375	17.000	3.125	22.375	22.500	15.000	20.500
22	182/4T	25.500	17.000	21.000	25.500	22.500	24.875	23.625	18.750	3.125	24.500	25.125	16.875	18.375
	213/5T	26.250	17.000	21.000	26.250	22.500	24.875	23.625	18.750	3.125	24.500	25.125	16.875	18.375
	254/6T	27.250	17.000	21.000	27.250	22.500	24.875	23.625	18.750	3.125	24.500	25.125	16.875	18.375
	284/6T	28.000	17.000	21.000	28.000	22.500	24.875	23.625	18.750	3.125	24.500	25.125	16.875	18.375
	284/6TS	28.000	17.000	21.000	28.000	22.500	24.875	23.625	18.750	3.125	24.500	25.125	16.875	18.375
	324/6TS	26.000	17.000	21.000	26.000	22.500	24.875	23.625	18.750	3.125	24.500	25.125	16.875	20.500
	364TS	26.000	17.000	21.000	26.000	22.500	24.875	23.625	18.750	3.125	24.500	25.125	16.875	21.375
24	184T	28.000	19.000	23.000	28.000	24.750	27.375	26.000	20.625	4.125	27.000	27.625	18.500	18.375
	213/5T	28.000	19.000	23.000	28.000	24.750	27.375	26.000	20.625	4.125	27.000	27.625	18.500	18.375
	254/6T	29.000	19.000	23.000	29.000	24.750	27.375	26.000	20.625	4.125	27.000	27.625	18.500	18.375
	284/6T	29.750	19.000	23.000	29.750	24.750	27.375	26.000	20.625	4.125	27.000	27.625	18.500	18.375
	284/6TS	29.750	19.000	23.000	29.750	24.750	27.375	26.000	20.625	4.125	27.000	27.625	18.500	18.375
	324/6TS	28.625	19.000	23.000	28.625	24.750	27.375	26.000	20.625	4.125	27.000	27.625	18.500	20.500
	364/5TS	28.625	19.000	23.000	28.625	24.750	27.375	26.000	20.625	4.125	27.000	27.625	18.500	21.375
27 Cl.2	184T	30.500	20.500	24.500	30.500	27.250	30.250	28.625	22.750	4.125	30.000	30.250	20.375	18.375
	213/5T	30.500	20.500	24.500	30.500	27.250	30.250	28.625	22.750	4.125	30.000	30.250	20.375	18.375
	254/6T	31.500	20.500	24.500	31.500	27.250	30.250	28.625	22.750	4.125	30.000	30.250	20.375	18.375
	284/6T	32.250	20.500	24.500	32.250	27.250	30.250	28.625	22.750	4.125	30.000	30.250	20.375	18.375
	324/6T	32.250	20.500	24.500	32.250	27.250	30.250	28.625	22.750	4.125	30.000	30.250	20.375	20.125

 # For TH, BH, UB, BAU, and TAU discharges.
J is from housing side over inlet collar.

Downblast fan discharge is extended to floor line. Standard outlet flange is supplied
D, L, and M are outside dimensions.

Dimensions are nominal and may include rounded values.
Tolerance ± 0.125

DIMENSIONS: ARR. 4

Size	Frame	A	B			C	D	F	G	J	L		M†	N
			#	TAD	DB						CL.2	CL.3/4		
27 Cl.3/4	324/6T	31.125	20.500	24.500	31.125	27.250	30.250	28.625	22.813	4.125	30.000	30.250	20.375	20.500
	324/6TS	31.125	20.500	24.500	31.125	27.250	30.250	28.625	22.813	4.125	30.000	30.250	20.375	20.500
	364/5TS	31.125	20.500	24.500	31.125	27.250	30.250	28.625	22.813	4.125	30.000	30.250	20.375	21.375
	404/5TS	31.125	20.500	24.500	31.125	27.250	30.250	28.625	22.813	4.125	30.000	30.250	20.375	23.625
30	254/6T	33.750	22.500	26.500	33.750	30.250	33.500	31.750	25.375	4.125	33.000	33.625	22.625	20.063
	284/6T	34.500	22.500	26.500	34.500	30.250	33.500	31.750	25.375	4.125	33.000	33.625	22.625	20.063
	324/6T	35.500	22.500	26.500	35.500	30.250	33.500	31.750	25.375	4.125	33.000	33.625	22.625	20.063
33	254/6T	37.750	24.500	28.500	37.750	33.313	36.875	34.938	27.875	4.125	36.500	36.875	24.875	20.063
	284/6T	38.500	24.500	28.500	38.500	33.313	36.875	34.938	27.875	4.125	36.500	36.875	24.875	20.063
	324/6T	39.500	24.500	28.500	39.500	33.313	36.813	34.938	27.875	4.125	36.500	36.875	24.875	20.063
	364/5T	37.750	24.500	28.500	37.750	33.313	36.875	34.938	28.000	4.125	36.500	36.875	24.875	21.375
36 Cl.2	284/6T	42.000	29.000	33.000	42.000	36.875	40.750	38.750	30.875	5.000	40.000	-	27.500	19.000
	324/6T	42.000	29.000	33.000	42.000	36.875	40.750	38.750	30.875	5.000	40.000	-	27.500	20.500
	364/5T	42.000	29.000	33.000	42.000	36.875	40.750	38.750	30.875	5.000	40.000	-	27.500	21.375

Size	Class	Motor Frame	A				B		C	D	F	G	H	J	L		M	
			TH, TAD	BH, BAU	UB, TAU	DB	*	TAU							Cl.2	Cl. 3,4	Cl.2	Cl. 3,4
36 Cl.3/4	3	324T	33.000	42.000	39.000	29.000	29.000	41.750	36.875	40.750	38.750	30.875	52.500	5.000	-	41.000	-	27.500
	3	326T	33.000	42.000	39.000	29.000	29.000	41.750	36.875	40.750	38.750	30.875	54.000	5.000	-	41.000	-	27.500
	3/4	364T	33.000	42.000	39.000	29.000	29.000	41.750	36.875	40.750	38.750	30.875	53.750	5.000	-	41.000	-	27.500
	3/4	365T	33.000	42.000	39.000	29.000	29.000	41.750	36.875	40.750	38.750	30.875	54.750	5.000	-	41.000	-	27.500
	3/4	404T	33.000	42.000	39.000	29.000	29.000	41.750	36.875	40.750	38.750	30.875	55.500	5.000	-	41.000	-	27.500
	3/4	405T	33.000	42.000	39.000	29.000	29.000	41.750	36.875	40.750	38.750	30.875	57.000	5.000	-	41.000	-	27.500
40	2	324T	36.000	46.000	43.000	31.000	31.000	45.250	40.750	44.875	42.750	34.125	55.375	5.000	44.750	44.750	29.875	-
	2	326T	36.000	46.000	43.000	31.000	31.000	45.250	40.750	44.875	42.750	34.125	56.875	5.000	44.750	44.750	29.875	-
	2/3/4	364T	36.000	46.000	43.000	31.000	31.000	45.250	40.750	44.875	42.750	34.125	56.625	5.000	44.750	44.750	-	30.375
	2/3/4	365T	36.000	46.000	43.000	31.000	31.000	45.250	40.750	44.875	42.750	34.125	57.625	5.000	44.750	44.750	-	30.375
	2/3/4	404T	36.000	46.000	43.000	31.000	31.000	45.250	40.750	44.875	42.750	34.125	58.375	5.000	44.750	44.750	-	30.375
	2/3/4	405T	36.000	46.000	43.000	31.000	31.000	45.250	40.750	44.875	42.750	34.125	59.875	5.000	44.750	44.750	-	30.375
	3/4	444T	36.000	46.000	43.000	31.000	31.000	45.250	40.750	44.875	42.750	34.125	62.625	5.000	44.750	44.750	-	30.375
	3/4	445T	36.000	46.000	43.000	31.000	31.000	45.250	40.750	44.875	42.750	34.125	64.625	5.000	44.750	44.750	-	30.375
44	2	364T	40.000	50.000	47.000	33.500	33.500	49.000	45.000	49.625	47.250	37.750	59.750	5.000	49.750	49.750	33.000	-
	2	365T	40.000	50.000	47.000	33.500	33.500	49.000	45.000	49.625	47.250	37.750	60.750	5.000	49.750	49.750	33.000	-
	2/3/4	404T	40.000	50.000	47.000	33.500	33.500	49.000	45.000	49.625	47.250	37.750	61.500	5.000	49.750	49.750	-	33.500
	2/3/4	405T	40.000	50.000	47.000	33.500	33.500	49.000	45.000	49.625	47.250	37.750	63.000	5.000	49.750	49.750	-	33.500
	2/3/4	444T	40.000	50.000	47.000	33.500	33.500	49.000	45.000	49.625	47.250	37.750	65.750	5.000	49.750	49.750	-	33.500
	2/3/4	445T	40.000	50.000	47.000	33.500	33.500	49.000	45.000	49.625	47.250	37.750	67.750	5.000	49.750	49.750	-	33.500
	3/4	447T	40.000	50.000	47.000	33.500	33.500	49.000	45.000	49.625	47.250	37.750	71.250	5.000	49.750	49.750	-	33.500
49	2	404T	43.500	55.000	51.500	36.000	36.000	53.250	49.500	54.625	52.000	41.500	64.875	5.000	54.750	54.750	35.375	-
	2	405T	43.500	55.000	51.500	36.000	36.000	53.250	49.500	54.625	52.000	41.500	66.375	5.000	54.750	54.750	35.375	-
	2/3/4	444T	43.500	55.000	51.500	36.000	36.000	53.250	49.500	54.625	52.000	41.500	69.125	5.000	54.750	54.750	-	36.875
	2/3/4	445T	43.500	55.000	51.500	36.000	36.000	53.250	49.500	54.625	52.000	41.500	71.125	5.000	54.750	54.750	-	36.875
	3/4	447T	43.500	55.000	51.500	36.000	36.000	53.250	49.500	54.625	52.000	41.500	74.625	5.000	54.750	54.750	-	36.875

 # For TH, BH, UB, BAU, and TAU discharges.

J is from housing side over inlet collar.

Downblast fan discharge is extended to floor line. Standard outlet flange is supplied

D, L, and M are outside dimensions.

Dimensions are nominal and may include rounded values.

Tolerance ± 0.125

DIMENSIONS: ARR. 4

CLASS 2 | SIZES 10-33, 36

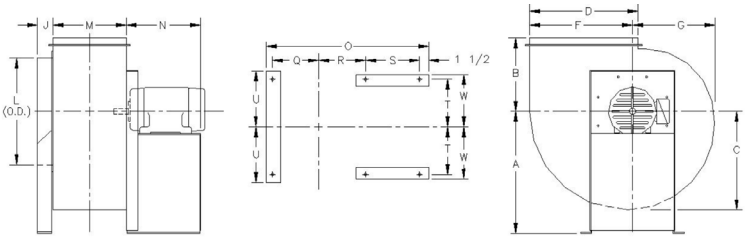

CLASS 3 & 4 | SIZES 36-49

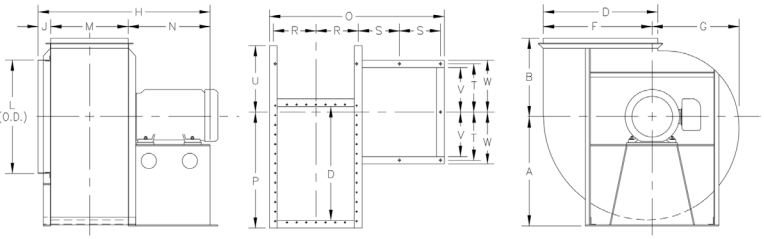

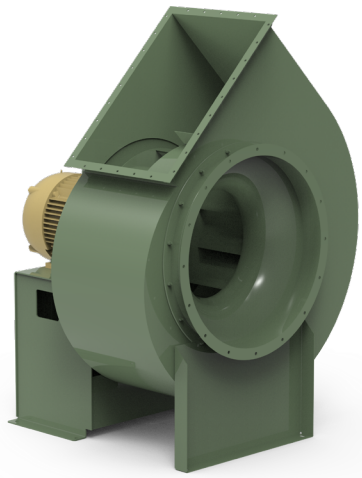

Size	Frame	O†		Q†		R†	S	T	U	W	a	b BAU/TAU	b TAD	c	d	Base holes
		Cl.2	Cl. 3,4	Cl.2	Cl. 3,4											
10	56	21.000*	-	5.750*	-	6.375	5.875	6.000	7.125*	6.750	9.500	13.625	15.000	10.500	7.625	0.563
	143/5T	21.000*	-	5.750*	-	6.375	5.875	6.000	7.125*	6.750	9.500	13.625	15.000	10.500	7.625	0.563
	182T	21.000*	-	5.750*	-	6.375	5.875	6.000	7.125*	6.750	9.500	13.625	15.000	10.500	7.625	0.563
12	56	23.250*	-	6.375*	-	7.000	6.875	7.500	8.625*	8.250	11.625	16.250	18.375	12.875	9.250	0.563
	143/5T	23.250*	-	6.375*	-	7.000	6.875	7.500	8.625*	8.250	11.625	16.250	18.375	12.875	9.250	0.563
	182/4T	23.250*	-	6.375*	-	7.000	6.875	7.500	8.625*	8.250	11.625	16.250	18.375	12.875	9.250	0.563
13	143/5T	24.250*	-	6.875*	-	7.500	6.875	7.500	8.625*	8.250	12.625	17.875	20.750	14.125	10.250	0.563
	182/4T	24.250*	-	6.875*	-	7.500	6.875	7.500	8.625*	8.250	12.625	17.875	20.750	14.125	10.250	0.563
15	143/5T	27.500*	-	7.375*	-	8.000	9.125	8.750	10.500*	9.500	14.125	19.750	22.500	15.750	11.375	0.563
	182/4T	27.500*	-	7.375*	-	8.000	9.125	8.750	10.500*	9.500	14.125	19.750	22.500	15.750	11.375	0.563
	213/5T	27.500*	-	7.375*	-	8.000	9.125	8.750	10.500*	9.500	14.125	19.750	22.500	15.750	11.375	0.563
16	143/5T	28.375	28.500	7.875	8.000	8.500	9.125	8.750	10.500	9.500	15.500	21.625	24.500	17.250	12.500	0.563
	182/4T	28.375	28.500	7.875	8.000	8.500	9.125	8.750	10.500	9.500	15.500	21.625	24.500	17.250	12.500	0.563
	213/5T	28.375	28.500	7.875	8.000	8.500	9.125	8.750	10.500	9.500	15.500	21.625	24.500	17.250	12.500	0.563
	254/6T	33.750	33.750	7.875	8.000	8.500	14.375	8.750	10.500	9.500	15.500	21.625	24.500	17.250	12.500	0.563
18	143/5T	35.250	35.375	8.625	8.750	9.250	14.375	10.375	11.500	11.125	17.250	23.625	26.500	19.125	13.875	0.563
	182/4T	35.250	35.375	8.625	8.750	9.250	14.375	10.375	11.500	11.125	17.250	23.625	26.500	19.125	13.875	0.563
	213/5T	35.250	35.375	8.625	8.750	9.250	14.375	10.375	11.500	11.125	17.250	23.625	26.500	19.125	13.875	0.563
	254/6T	35.250	35.375	8.625	8.750	9.250	14.375	10.375	11.500	11.125	17.250	23.625	26.500	19.125	13.875	0.563
	284/6T	35.250	35.375	8.625	8.750	9.250	14.375	10.375	11.500	11.125	17.250	23.625	26.500	19.125	13.875	0.563
	284/6TS	35.250	35.375	8.625	8.750	9.250	14.375	10.375	11.500	11.125	17.250	23.625	26.500	19.125	13.875	0.563
20	182/4T	36.375	36.500	9.313	9.188	9.813	14.375	10.375	11.500	11.125	18.875	26.125	29.000	21.125	15.250	0.563
	213/5T	36.375	36.500	9.313	9.188	9.813	14.375	10.375	11.500	11.125	18.875	26.125	29.000	21.125	15.250	0.563
	254/6T	36.375	36.500	9.313	9.188	9.813	14.375	10.375	11.500	11.125	18.875	26.125	29.000	21.125	15.250	0.563
	284/6T	36.375	36.500	9.313	9.188	9.813	14.375	10.375	11.500	11.125	18.875	26.125	29.000	21.125	15.250	0.563
	284/6TS	36.375	36.500	9.313	9.188	9.813	14.375	10.375	11.500	11.125	18.875	26.125	29.000	21.125	15.250	0.563
	324TS	-	38.500	-	9.250	9.625	16.125	9.375	11.125	10.250	18.875	26.125	29.000	21.125	15.250	0.563
22	182/4T	38.250	38.375	10.125	10.250	10.750	14.375	10.375	11.500	11.125	21.000	28.750	31.500	23.250	16.750	0.563
	213/5T	38.250	38.375	10.125	10.250	10.750	14.375	10.375	11.500	11.125	21.000	28.750	31.500	23.250	16.750	0.563
	254/6T	38.250	38.375	10.125	10.250	10.750	14.375	10.375	11.500	11.125	21.000	28.750	31.500	23.250	16.750	0.563
	284/6T	38.250	38.375	10.125	10.250	10.750	14.375	10.375	11.500	11.125	21.000	28.750	31.500	23.250	16.750	0.563
	284/6TS	38.250	38.375	10.125	10.250	10.750	14.375	10.375	11.500	11.125	21.000	28.750	31.500	23.250	16.750	0.563
	324/6TS	-	40.375	10.188	10.563	10.750	16.125	10.875	12.625	11.750	21.000	28.750	31.500	23.250	16.750	0.563
	364TS	-	41.250	10.188	10.563	10.750	17.000	10.875	12.625	11.750	21.000	28.750	31.500	23.250	16.750	0.563
24	184T	39.875	40.000	11.063	10.938	11.563	14.375	12.250	13.500	13.500	23.125	31.875	34.625	25.625	18.500	0.750
	213/5T	39.875	40.000	11.063	10.938	11.563	14.375	12.250	13.500	13.500	23.125	31.875	34.625	25.625	18.500	0.750
	254/6T	39.875	40.000	11.063	10.938	11.563	14.375	12.250	13.500	13.500	23.125	31.875	34.625	25.625	18.500	0.750
	284/6T	39.875	40.000	11.063	10.938	11.563	14.375	12.250	13.500	13.500	23.125	31.875	34.625	25.625	18.500	0.750
	284/6TS	39.875	40.000	11.063	10.938	11.563	14.375	12.250	13.500	13.500	23.125	31.875	34.625	25.625	18.500	0.750
	324/6TS	-	43.000	-	11.500	11.375	16.125	12.250	14.375	13.500	23.125	31.875	34.625	25.625	18.500	0.750
	364/5TS	-	43.875	-	11.500	11.375	17.000	12.250	14.375	13.500	23.125	31.875	34.625	25.625	18.500	0.750
27 Cl.2	184T	41.750	41.875	11.875	12.000	12.500	14.375	13.625	14.875	14.875	25.375	34.750	37.500	28.250	20.375	0.750
	213/5T	41.750	41.875	11.875	12.000	12.500	14.375	13.625	14.875	14.875	25.375	34.750	37.500	28.250	20.375	0.750
	254/6T	41.750	41.875	11.875	12.000	12.500	14.375	13.625	14.875	14.875	25.375	34.750	37.500	28.250	20.375	0.750
	284/6T	41.750	41.875	11.875	12.000	12.500	14.375	13.625	14.875	14.875	25.375	34.750	37.500	28.250	20.375	0.750
	324/6T	43.375	-	11.875	-	12.500	15.875	13.625	14.875	14.875	25.375	34.750	37.500	28.250	20.375	0.750

† Dimensions may vary with narrow-width construction.

** O, Q, and U dimensions are given if inlet hanger option is selected.*

Downblast fan discharge is extended to floor line. Standard outlet flange is supplied

Dimensions are nominal and may include rounded values. Tolerance ± 0.125

DIMENSIONS: ARR. 4

Size	Frame	O†		Q†		R†	S	T	U	W	a	b BAU/TAU	b TAD	c	d	Base holes
		Cl.2	Cl. 3,4	Cl.2	Cl. 3,4											
27 Cl.3/4	324/6T	-	44.875	-	12.438	12.313	16.125	13.625	15.500	14.875	25.375	34.750	37.500	28.250	20.375	0.750
	324/6TS	-	44.875	-	12.438	12.313	16.125	13.625	15.500	14.875	25.375	34.750	37.500	28.250	20.375	0.750
	364/5TS	-	45.750	-	12.438	12.313	17.000	13.625	15.500	14.875	25.375	34.750	37.500	28.250	20.375	0.750
	404/5TS	-	48.000	-	12.438	12.313	19.250	13.625	15.500	14.875	25.375	34.750	37.500	28.250	20.375	0.750
30	254/6T	45.625	45.750	13.000	13.125	13.750	15.875	14.750	16.000	16.000	28.250	38.375	41.250	31.375	22.625	0.750
	284/6T	45.625	45.750	13.000	13.125	13.750	15.875	14.750	16.000	16.000	28.250	38.375	41.250	31.375	22.625	0.750
	324/6T	45.625	45.750	13.000	13.125	13.750	15.875	14.750	16.000	16.000	28.250	38.375	41.250	31.375	22.625	0.750
33	254/6T	47.875	48.000	14.125	14.250	14.875	15.875	15.750	17.000	17.000	31.125	42.125	45.000	34.625	25.250	0.750
	284/6T	47.875	48.000	14.125	14.250	14.875	15.875	15.750	17.000	17.000	31.125	42.125	45.000	34.625	25.250	0.750
	324/6T	47.875	48.000	14.125	14.250	14.875	15.875	15.750	17.000	17.000	31.125	42.125	45.000	34.625	25.250	0.750
	364/5T	-	50.250	-	14.688	14.563	17.000	16.000	18.250	17.250	31.125	42.125	45.000	34.625	25.250	0.750
36 Cl.2	284/6T	49.188	-	15.188	-	15.875	14.625	17.500	19.000	19.000	34.375	47.875	47.875	38.250	27.500	0.750
	324/6T	51.188	-	15.438	-	16.125	16.125	17.500	19.000	19.000	34.375	47.875	47.875	38.250	27.500	0.750
	364/5T	52.063	-	15.438	-	16.125	17.000	17.500	19.000	19.000	34.375	47.875	47.875	38.250	27.500	0.750

Size	Class	Motor Frame	N	O	P	R	S	T	U	V	W	a	b		c	d	Base holes
													Cl.2	Cl.3/4			
36 Cl.3/4	3	324T	20.000	53.125	41.750	15.250	9.813	17.500	24.500	16.000	19.000	34.375	47.875	57.250	38.250	27.500	0.875
	3	326T	21.500	54.625	41.750	15.250	10.563	17.500	24.500	16.000	19.000	34.375	47.875	57.250	38.250	27.500	0.875
	3/4	364T	21.375	54.500	41.750	15.250	10.500	17.500	24.500	16.000	19.000	34.375	47.875	57.250	38.250	27.500	0.875
	3/4	365T	22.375	55.500	41.750	15.250	11.000	17.500	24.500	16.000	19.000	34.375	47.875	57.250	38.250	27.500	0.875
	3/4	404T	23.125	53.625	41.750	15.250	10.063	17.500	24.500	16.000	19.000	34.375	47.875	57.250	38.250	27.500	0.875
	3/4	405T	24.625	55.125	41.750	15.250	10.813	17.500	24.500	16.000	19.000	34.375	47.875	57.250	38.250	27.500	0.875
40	2	324T	20.000	56.000	45.750	16.688	9.813	19.000	26.250	17.500	20.500	38.000	52.125	62.250	42.125	30.000	0.875
	2	326T	21.500	57.500	45.750	16.688	10.563	19.000	26.250	17.500	20.500	38.000	52.125	62.250	42.125	30.000	0.875
	2/3/4	364T	21.375	57.375	45.750	16.688	10.500	19.000	26.250	17.500	20.500	38.000	52.125	62.250	42.125	30.000	0.875
	2/3/4	365T	22.375	58.375	45.750	16.688	11.000	19.000	26.250	17.500	20.500	38.000	52.125	62.250	42.125	30.000	0.875
	2/3/4	404T	23.125	56.500	45.750	16.688	10.063	19.000	26.250	17.500	20.500	38.000	52.125	62.250	42.125	30.000	0.875
	2/3/4	405T	24.625	58.000	45.750	16.688	10.813	19.000	26.250	17.500	20.500	38.000	52.125	62.250	42.125	30.000	0.875
	3/4	444T	27.250	60.625	45.750	16.688	12.125	19.000	26.250	17.500	20.500	38.000	52.125	62.250	42.125	30.000	0.875
	3/4	445T	29.250	62.625	45.750	16.688	13.125	19.000	26.250	17.500	20.500	38.000	52.125	62.250	42.125	30.000	0.875
44	2	364T	21.375	60.500	50.188	18.250	10.500	21.000	28.750	19.500	22.500	42.000	57.000	68.000	46.500	33.625	0.875
	2	365T	22.375	61.500	50.188	18.250	11.000	21.000	28.750	19.500	22.500	42.000	57.000	68.000	46.500	33.625	0.875
	2/3/4	404T	23.125	59.625	50.188	18.250	10.063	21.000	28.750	19.500	22.500	42.000	57.000	68.000	46.500	33.625	0.875
	2/3/4	405T	24.625	61.125	50.188	18.250	10.813	21.000	28.750	19.500	22.500	42.000	57.000	68.000	46.500	33.625	0.875
	2/3/4	444T	27.250	63.750	50.188	18.250	12.125	21.000	28.750	19.500	22.500	42.000	57.000	68.000	46.500	33.625	0.875
	2/3/4	445T	29.250	65.750	50.188	18.250	13.125	21.000	28.750	19.500	22.500	42.000	57.000	68.000	46.500	33.625	0.875
	3/4	447T	32.750	69.250	50.188	18.250	14.875	21.000	28.750	19.500	22.500	42.000	57.000	68.000	46.500	33.625	0.875
49	2	404T	23.125	63.000	55.000	19.938	10.063	23.000	31.250	21.500	24.500	46.125	62.250	74.375	51.250	36.500	0.875
	2	405T	24.625	64.500	55.000	19.938	10.813	23.000	31.250	21.500	24.500	46.125	62.250	74.375	51.250	36.500	0.875
	2/3/4	444T	27.250	67.125	55.000	19.938	12.125	23.000	31.250	21.500	24.500	46.125	62.250	74.375	51.250	36.500	0.875
	2/3/4	445T	29.250	69.125	55.000	19.938	13.125	23.000	31.250	21.500	24.500	46.125	62.250	74.375	51.250	36.500	0.875
	3/4	447T	32.750	72.625	55.000	19.938	14.875	23.000	31.250	21.500	24.500	46.125	62.250	74.375	51.250	36.500	0.875

† *Dimensions may vary with narrow-width construction.*

* *O, Q, and U dimensions are given if inlet hanger option is selected.*

Downblast fan discharge is extended to floor line. Standard outlet flange is supplied

Dimensions are nominal and may include rounded values. Tolerance ± 0.125

DIMENSIONS: ARR. 4F/4H/4V

ALL SIZES

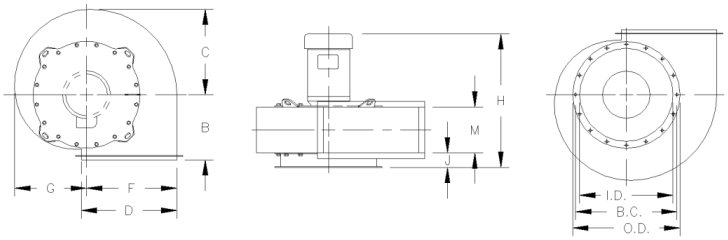

Size	Frame	B	C	D	F	G	H †		J ‡	M
							Flange	Flush		
10	143/145TC	8.500	10.188	11.313	10.688	8.563	22.250	19.750	2.625	8.125
12	143/145TC	10.000	12.375	13.750	13.000	10.375	23.125	21.000	2.125	9.375
	182/184TC	10.000	12.375	13.750	13.000	10.375	26.125	24.000	2.125	9.375
13	143/145TC	11.000	13.625	15.188	14.313	11.438	24.125	22.000	2.125	10.375
	182/184TC	11.000	13.625	15.188	14.313	11.438	27.125	25.000	2.125	10.375
15	143/145TC	12.000	15.125	16.875	15.875	12.688	26.125	23.000	3.125	11.375
	182/184TC	12.000	15.125	16.875	15.875	12.688	29.125	26.000	3.125	11.375
	213/215TC	12.000	15.125	16.875	15.875	12.688	30.375	27.250	3.125	11.375
16	143/145TC	13.000	16.688	18.500	17.500	14.000	27.000	23.875	3.125	12.250
	182/184TC	13.000	16.688	18.500	17.500	14.000	30.000	26.875	3.125	12.250
	213/215TC	13.000	16.688	18.500	17.500	14.000	31.250	28.125	3.125	12.250
	254/256TC	13.000	16.688	18.500	17.500	14.000	34.875	34.750	3.125	12.250
18	143/145TC	14.000	18.438	20.438	19.375	15.438	28.625	25.500	3.125	13.875
	182/184TC	14.000	18.438	20.438	19.375	15.438	31.625	28.500	3.125	13.875
	213/215TC	14.000	18.438	20.438	19.375	15.438	32.875	29.750	3.125	13.875
	254/256TC	14.000	18.438	20.438	19.375	15.438	36.500	33.375	3.125	13.875
	284/286TC&TSC	14.000	18.438	20.438	19.375	15.438	40.500	37.375	3.125	13.875
20	182/184TC	15.500	20.375	22.500	21.375	17.063	32.750	29.625	3.125	15.000
	213/215TC	15.500	20.375	22.500	21.375	17.063	34.000	30.875	3.125	15.000
	254/256TC	15.500	20.375	22.500	21.375	17.063	37.625	34.500	3.125	15.000
	284/286TC&TSC	15.500	20.375	22.500	21.375	17.063	41.625	38.500	3.125	15.000
22	182/184TC	17.000	22.500	24.813	23.625	18.813	34.625	31.500	3.125	16.875
	213/215TC	17.000	22.500	24.813	23.625	18.813	35.875	32.750	3.125	16.875
	254/256TC	17.000	22.500	24.813	23.625	18.813	39.500	36.375	3.125	16.875
	284/286TC&TSC	17.000	22.500	24.813	23.625	18.813	43.500	40.375	3.125	16.875
	324/326TSC	17.000	22.563	24.813	23.688	18.875	45.500	43.375	3.125	16.875
24	213/215TC	19.000	24.813	27.313	26.063	20.750	38.500	34.375	4.125	18.500
	254/256TC	19.000	24.813	27.313	26.063	20.750	42.125	38.000	4.125	18.500
	284/286TC&TSC	19.000	24.813	27.313	26.063	20.750	46.125	42.000	4.125	18.500
	324/326TSC	19.000	24.813	27.313	26.063	20.750	48.125	44.000	4.125	18.500
27	213/215TC	20.500	27.313	30.188	28.688	22.875	40.375	36.250	4.125	20.375
	254/256TC	20.500	27.313	30.188	28.688	22.875	44.000	39.875	4.125	20.375
	284/286TC	20.500	27.313	30.188	28.688	22.875	48.000	43.875	4.125	20.375
	324/326TSC	20.500	27.313	30.188	28.688	22.875	50.000	45.875	4.125	20.375
30	254/256TC	22.500	30.438	33.438	31.938	25.500	46.250	42.125	4.125	22.625
	284/286TC	22.500	30.438	33.438	31.938	25.500	50.250	46.125	4.125	22.625
	324/326TC	22.500	30.438	33.438	31.938	25.500	52.250	48.125	4.125	22.625
33	254/256TC	24.500	33.500	36.813	35.125	28.063	48.500	44.375	4.125	24.875
	284/286TC	24.500	33.500	36.813	35.125	28.063	52.500	48.375	4.125	24.875
	324/326TC	24.500	33.500	36.813	35.125	28.063	54.500	50.375	4.125	24.875

† For reference only; will vary accross motor manufacturers.

‡ For Arr.4H and Arr.4V fans only

Dimensions are nominal and may include rounded values. Consult certified drawing packages to confirm exact dimensions.

Tolerance: ± 0.125"

MATERIAL SPECIFICATIONS

ARRANGEMENT 4, 4F, 4H, & 4V WEIGHTS

Arr. 4 Bare Fan Weights *Without Wheels*

Fan Size	Motor Frame	Class 2	Class 3,4
10	56-182	57	-
12	56-184	77	-
13	143-184	81	-
15	182-215	112	-
16	143-215	135	178
	254/6	141	189
18	143-286	168	223
20	182-286	212	262
	324	-	276
22	182-286	231	300
	324-364	-	362
24	184-286	276	354
	324-365	-	434
27	184-286	348	426
	324/6	348	-
	324-405	-	524
30	254-326	492	596
33	254-326	578	814
	364/5	-	879
36 Class 2	284/6	853	-
	324/6	815	-
	364/5	814	-

Arr. 4 Class 3/4 Bare Fan Weights *Without Wheels*

Fan Size	Motor Frame	Discharge						
		BAU	BH	DB	TAD	TAU	TH	UB
36	324/6	1341	1295	1144	1216	1301	1188	1286
	364/5	1348	1302	1146	1220	1307	1191	1292
	404/5	1343	1297	1157	1226	1306	1198	1291
40	364/5	1606	1553	1365	1468	1564	1426	1548
	404/5	1599	1546	1377	1474	1561	1433	1545
	444/5	1740	1687	1480	1589	1694	1548	1678
44	404/5	1836	1775	1578	1728	1796	1682	1778
	444/5	1995	1934	1692	1861	1948	1815	1929
	447	2047	1986	1732	1905	1997	1859	1979
49	444/5	2340	2269	1972	2171	2281	2121	2261
	447	2397	2325	2015	2219	2335	2169	2315

Arr. 4 Class 2 Bare Fan Weights *Without Wheels*

Fan Size	Motor Frame	Discharge						
		BAU	BH	DB	TAD	TAU	TH	UB
40	324/6	1393	1340	1158	1259	1352	1218	1336
	364/5	1406	1353	1165	1268	1364	1226	1348
	404/5	1399	1346	1177	1274	1361	1233	1345
44	364/5	1635	1573	1356	1515	1591	1469	1573
	404/5	1632	1571	1374	1524	1592	1478	1574
	444/5	1791	1730	1488	1657	1744	1611	1725
49	404/5	1935	1863	1584	1775	1878	1725	1858
	444/5	2094	2023	1726	1925	2035	1875	2015

Class 2 Bare Fan Weights *Without Wheels*

Size	Arr. 4V		Arr. 4F		Arr. 4H	
	Class 2	Class 3,4	Class 2	Class 3,4	Class 2	Class 3,4
10	48	--	43	--	49	--
12	64	--	58	--	65	--
13	76	--	70	--	77	--
15	109	--	92	--	110	--
16	146	159	127	140	148	161
18	173	189	151	169	175	191

Class 2 Bare Fan Weights *Without Wheels*

Size	Arr. 4V		Arr. 4F		Arr. 4H	
	Class 2	Class 3,4	Class 2	Class 3,4	Class 2	Class 3,4
20	216	227	193	204	220	230
22	277	295	252	269	281	298
24	449	449	394	394	--	--
27	531	531	470	470	--	--
30	707	707	640	640	--	--
33	845	845	770	770	--	--

ARR. 4F MOUNTING DIMENSIONS

Size	B.C.	Holes†	
		Qty.	Dia.
10	14.25	7	5/16-18
12	16.88	7	5/16-18
13	18.38	7	5/16-18
15	20.13	7	5/16-18
16	22.00	7	5/16-18
18	24.50	15	3/8-16
20	26.25	15	3/8-16
22	28.88	15	3/8-16
24	32.50	15	1/2-13
27	35.13	15	1/2-13
30	38.50	16	1/2-13
33	41.75	16	1/2-13

† *Sizes 10-16 holes straddle centerlines.*

† *Sizes 18-33 holes on centerlines.*

Wheel Weights & WR²

Fan Size	Class 2				Class 3				Class 4			
	AcF		PLR		AcF		PLR		AcF		PLR	
	Wt.	WR²	Wt.	WR²	Wt.	WR²	Wt.	WR²	Wt.	WR²	Wt.	WR²
10	5		11	1	-	-	-	-	-	-	-	-
12	8	2	15	2	-	-	-	-	-	-	-	-
13	10	3	20	4	-	-	-	-	-	-	-	-
15	13	3	21	5	-	-	-	-	-	-	-	-
16	27	8	27	8	32	10	33	10	-	-	-	-
18	32	11	32	10	47	13	46	12	49	14	48	12
20	38	17	50	17	56	21	58	24	56	21	58	24
22	46	24	58	27	63	29	67	32	73	36	67	32
24	62	38	65	43	100	54	100	53	100	54	100	53
27	72	55	76	64	115	78	114	75	115	78	117	78
30	91	87	103	103	151	120	139	105	151	120	152	120
33	119	130	136	146	173	172	173	170	180	185	173	170
36	185	227	205	258	253	260	260	276	266	289	260	276
40	268	332	297	395	305	409	318	432	320	450	318	432
44	321	535	367	648	352	598	376	660	377	691	441	841
49	488	902	522	985	550	985	585	1068	642	1279	590	1078

MATERIAL SPECIFICATIONS

U.S. standard sheet gauge to 7 gauge. Dimensions in inches. Weights in pounds. WR^2 in lb.-ft^2.

CLASS 1

Size	Housing				Shaft		Bearing		Bearing Pedestal	Wheel						Bare Fan Weight					
	Arr. 1, 8, & 9		Arr. 3		Arr. 1, 8, & 9	Arr. 3	Arr. 1, 8, & 9	Arr. 3		ACF		BC		PLR		ACF		BC		PLR	
	Scroll	Sides	Scroll	Sides						WR^2	Wt.	WR^2	Wt.	WR^2	Wt.	Arr. 1	Arr. 3	Arr. 1	Arr. 3	Arr. 1	Arr. 3
12	16	14	-	-	1	-	J	-	10	1	7	-	-	2	15	102	-	-	-	110	-
15	16	14	-	-	1 3/16	-	J	-	10	3	12	-	-	4	21	137	-	-	-	146	-
18	14	14	-	-	1 3/16	-	J	-	10	10	32	11	36	10	32	202	-	206	-	202	-
22	14	14	-	-	1 7/16	-	J	-	10	22	44	30	59	26	50	279	-	294	-	285	-
24	14	12	12	10	1 7/16	1 11/16	J	J	7	38	71	49	88	43	77	401	396	418	413	407	402
27	14	12	12	10	1 11/16	1 11/16	J	J	7	63	90	72	103	64	91	495	515	508	528	496	516
30	14	12	12	10	1 11/16	1 15/16	J	J	7	91	103	112	126	97	108	573	683	596	706	578	688
33	14	12	12	10	1 15/16	1 15/16	J	J	7	121	119	151	146	131	127	669	749	696	776	677	757
36	12	12	10	10	1 15/16	1 15/16	J	C	7	232	178	265	205	235	181	893	998	920	1025	896	1001
40	10	10	10	10	2 3/16	2 3/16	C	C	0.25	306	188	301	231	310	191	1383	1223	1426	1266	1386	1226
44	10	10	10	10	2 7/16	2 3/16	C	C	0.25	501	260	576	301	506	264	1680	1540	1721	1581	1684	1544
49	10	10	10	10	2 7/16	2 7/16	C	C	0.25	809	344	937	402	903	377	1979	1884	2037	1942	2012	1917
54	10	10	10	10	2 11/16	2 7/16	D	D	0.25	1205	411	1397	483	1344	453	2596	2191	2668	2263	2638	2233
60	10	10	10	10	2 15/16	2 11/16	D	D	0.25	1761	509	2402	648	2330	637	3059	2644	3198	2783	3187	2772
66	10	10	10	10	2 15/16	2 15/16	D	E	0.25	3583	825	4109	956	3915	893	4165	3835	4296	3966	4233	3903
73	10	10	10	10	3 7/16	3 7/16	D	F	0.375	5705	1047	6385	1215	6441	1164	5047	4632	5215	5164	5164	4749
80	0.25	0.25	0.25	0.25	4 7/16	3 15/16	H	F	0.375	13170	2050	-	-	10870	1800	8135	8135	-	-	6199	6199
89	0.25	0.25	0.25	0.25	4 15/16	3 15/16	H	F	0.375	19180	2420	-	-	15630	2100	9779	9779	-	-	7246	7246

CLASS 2

Size	Housing				Shaft		Bearing		Bearing Pedestal	Wheel						Bare Fan Weight					
	Arr. 1, 8, & 9		Arr. 3		Arr. 1, 8, & 9	Arr. 3	Arr. 1, 8, & 9	Arr. 3		ACF		BC		PLR		ACF		BC		PLR	
	Scroll	Sides	Scroll	Sides						WR^2	Wt.	WR^2	Wt.	WR^2	Wt.	Arr. 1	Arr. 3	Arr. 1	Arr. 3	Arr. 1	Arr. 3
12	16	14	-	-	1 3/16	-	J	-	10	1	7	-	-	2	15	107	-	-	-	115	-
15	16	14	-	-	1 7/16	-	J	-	10	3	12	-	-	4	21	147	-	-	-	156	-
18	14	14	-	-	1 11/16	-	J	-	10	10	32	20	48	10	32	221	-	238	-	222	-
22	14	14	-	-	1 11/16	-	J	-	7	22	44	30	68	26	59	334	-	358	-	349	-
24	14	12	12	10	1 11/16	1 11/16	J	J	7	38	71	49	88	43	74	440	485	458	503	444	489
27	14	12	12	10	1 15/16	1 11/16	J	J	7	63	90	72	103	64	91	520	655	533	668	521	656
30	14	12	12	10	1 15/16	1 15/16	K	K	0.25	91	103	111	125	104	115	698	838	620	860	710	850
33	14	12	12	10	2 3/16	1 15/16	K	K	0.25	121	119	151	146	146	137	859	914	886	941	877	932
36	12	12	10	10	2 3/16	2 3/16	K	C	0.25	232	178	267	204	278	206	1068	1193	1094	1219	1096	1221
40	10	10	10	10	2 7/16	2 7/16	D	C	0.38	306	188	309	242	355	214	1558	1298	1612	1352	1584	1324
44	10	10	10	10	2 11/16	2 11/16	D	E	0.38	501	260	584	311	568	289	1910	1845	1961	1896	1939	1874
49	10	10	10	10	2 15/16	2 11/16	D	E	0.38	809	344	937	402	903	377	2244	2119	2297	2172	2272	2147
54	10	10	10	10	3 7/16	2 15/16	D	F	0.38	1205	411	1601	541	1599	520	3024	2739	3146	2861	3125	2840
60	7	7	7	7	3 7/16	3 7/16	D	F	0.38	1761	509	2489	670	2419	660	3862	3637	4010	3785	4000	3775
66	7	7	7	7	3 7/16	3 7/16	D	F	0.38	3583	825	4110	972	4074	922	5015	4235	5147	4367	5097	4317
73	7	7	7	7	3 15/16	3 15/16	D	F	0.38	5705	1047	6382	1229	6442	1179	6214	5734	6364	5884	6314	5834
80	0.25	0.25	0.25	0.25	4 7/16	3 15/16	H	F	0.38	13170	2050	-	-	10870	1800	8818	8818	-	-	6164	6164
89	0.25	0.25	0.25	0.25	4 15/16	3 15/16	H	F	0.38	19180	2420	-	-	15630	2100	10646	10646	-	-	7246	7246

BEARING TYPE: *C - Sealmaster SPM* *D - Sealmaster MPD* *E - Link-Belt P-300* *F - Link-Belt 22400*
G - Link-Belt 22500 *H - Link-Belt 6800* *J - Dodge DLAH* *K - Dodge DLMAH*

***nyb** reserves the right to substitute bearings of equal rating.*

†*Dimensions indicated by a letter are in inches as follows:* *A - 3.00 x 2.00 x 0.18* *B - 4.00 x 3.00 x 0.25* *C - 5.00 x 3.50 x 0.31*

**Bare Fan Weight is determined on a per-job basis for sizes 80 and 89. .*

*Consult **nyb** for custom sizes and construction.*

CLASS 3															
	Housing		Shaft		Bearing		Bearing Pedestal	Wheel				Bare Fan Weight			
								ACF		PLR		ACF		PLR	
	Scroll	Side Sheet	Arr. 1, 8, & 9	Arr. 3	Arr. 1, 8, & 9	Arr. 3	Arr. 1, 8, & 9 Pedestal	WR^2	Weight	WR^2	Weight	Arr. 1, 8, & 9	Arr. 3	Arr. 1, 8, & 9	Arr. 3
18	10	10	1 15/16	-	K	-	10	12	44	11	43	299	-	298	-
22	10	10	1 15/16	-	K	-	7	23	58	28	63	343	-	348	-
24	10	10	2 3/16	1 15/16	K	K	7	43	82	46	87	582	677	587	682
27	10	10	2 3/16	1 15/16	K	K	0.25	65	101	69	103	736	796	738	798
30	10	10	2 7/16	2 3/16	K	K	0.25	115	131	110	127	1001	1071	997	1067
33	7	7	2 7/16	2 3/16	K	E	0.25	154	145	155	147	1270	1200	1272	1202
36	7	7	2 11/16	2 7/16	D	E	0.38	259	258	275	268	1553	1403	1563	1413
40	7	7	2 15/16	2 15/16	D	E	0.38	407	311	431	325	2051	1711	2065	1725
44	7	7	2 15/16	2 15/16	D	E	0.38	597	358	628	372	2558	2258	2572	2272
49	7	7	3 7/16	2 15/16	D	F	0.38	976	558	1059	589	3103	2518	3134	2549
54	7	7	3 15/16	3 7/16	D	F	0.38	1760	699	2097	796	4169	3369	4266	3466
60	7	7	4 7/16	3 15/16	D	F	0.38	2763	855	3188	956	5315	3965	5416	4066
66	7	7	4 7/16	3 15/16	G	F	0.38	4160	1061	4938	1210	7051	5901	7200	6050
73	7	7	4 7/16	4 7/16	G	G	0.38	6129	1248	7493	1486	7703	6423	7941	6661
80	0.25	0.25	5 7/16	4 15/16	H	G	0.50	13,170	2050	10,870	1800	9356‡	6509‡	9356‡	6509‡
89	0.25	0.25	5 7/16	4 15/16	H	G	0.50	19,180	2420	15,630	2100	11,079‡	7615‡	11,079‡	7615‡

‡*Bare fan weights less wheel.*

CLASS 4																	
Size	Housing				Shaft		Bearing		Bearing Pedestal		Wheel				Bare Fan Weight			
									Arr. 1 & 8		ACF		PLR		ACF		PLR	
	Scroll	Side Sheet	Side Angle†	Inlet Collar	Arr. 1 and Arr. 8	Arr. 3 and Arr. 7	Arr. 1 and Arr. 8	Arr. 3 and Arr. 7	Pedestal Top	Pedestal Side	WR^2	Weight	WR^2	Weight	Arr. 1	Arr. 3	Arr. 1	Arr. 3
18	10	10	-	10	1 11/16	-	H	-	0.38	0.25	14	49	12	48	362	-	359	-
22	10	10	-	10	1 15/16	-	H	-	0.38	0.25	36	73	32	67	495	-	489	-
24	10	10	-	10	2 3/16	-	H	-	0.38	0.25	54	100	53	100	665	-	665	-
27	10	10	-	10	2 7/16	-	H	-	0.50	0.38	78	115	78	117	905	-	907	-
30	10	10	-	10	2 7/16	2 3/16	H	F	0.50	0.38	120	151	120	152	1191	990	1192	991
33	7	7	-	10	2 11/16	2 3/16	H	F	0.50	0.38	185	180	170	173	1532	1197	1525	1190
36	7	7	A	7	2 15/16	2 7/16	H	F	0.50	0.38	316	268	298	261	1782	1414	1775	1407
40	7	7	A	7	3 7/16	2 11/16	H	F	0.50	0.38	503	310	514	339	2153	1730	2182	1759
44	7	7	A	7	3 7/16	2 15/16	H	F	0.50	0.38	814	410	860	438	2731	2342	2759	2370
49	7	7	A	7	3 15/16	2 15/16	H	F	0.50	0.38	1307	631	1362	661	3247	2599	3277	2629
54	7	7	B	7	3 15/16	3 7/16	H	F	0.50	0.38	2125	788	2200	824	4347	3503	4383	3539
60	7	7	B	7	4 7/16	3 15/16	H	F	0.50	0.38	3103	916	3205	953	5407	4094	5444	4131
66	7	7	C	7	4 15/16	3 15/16	H	F	0.50	0.38	5337	1262	4831	1209	7459	6193	7406	6140
73	7	7	C	7	5 7/16	4 7/16	H	G	0.50	0.38	8172	1536	7480	1465	8385	6817	8314	6746
80	7	7	C	7	5 7/16	4 15/16	H	G	0.50	0.38	13,170	2050	10,870	1800	•	•	•	•
89	7	7	C	7	6	4 15/16	H	G	0.50	0.38	19,180	2420	15,630	2100	•	•	•	•

BEARING TYPE: *C - Sealmaster SPM* *D - Sealmaster MPD* *E - Link-Belt P-300* *F - Link-Belt 22400*
G - Link-Belt 22500 *H - Link-Belt 6800* *J - Dodge DLAH* *K - Dodge DLMAH*

***nyb** reserves the right to substitute bearings of equal rating.*

†*Dimensions indicated by a letter are in inches as follows:* *A - 3.00 x 2.00 x 0.18* *B - 4.00 x 3.00 x 0.25* *C - 5.00 x 3.50 x 0.31*

•*Bare Fan Weight is determined on a per-job basis for sizes 80 and 89. .*

*Consult **nyb** for custom sizes and construction.*

FAN ENGINEERING & SELECTION

Fans are an integral part of the systems in which they are applied. As such, New York Blower sales representatives work closely with design engineers in assessing requirements and meeting critical performance and dimensional specifications. Because of the wide variety of choices available, it is recommended that selection be made using New York Blower's online fan selection software, Fan-To-Size, and that a New York Blower sales representative assist in optimizing the final selection.

CORRECTION FACTORS

Fan performance is based on actual cubic feet per minute (ACFM) at the fan inlet at standard density (0.075 lbs./ft.^{3}) and static pressure at the fan outlet. Static pressure capabilities are show in inches water gauge ("WG).

Air-density corrections are necessary for proper selection when air density varies from the standard 0.075 lbs./ft^3 at 70°F. at sea level. Multiply the required static pressure at operating conditions by the appropriate factors in Charts III, IV, and V to obtain the corrected static pressure for standard conditions. Pressure and BHP will be reduced at conditions by the inverse of these factors. Multiply one factor by the other if temperature and altitude are non-standard. For example: if the installation is located at an altitude of 4000 ft. and the gas temperature is 300°F., the correction factor is 1.66 (1.16 x 1.43).

CHART I
Temperature Derates for SWSI Size 10 - 73 Wheel Speed Limits

TEMP. °F	WHEEL MATERIAL				
	Steel	Aluminum	Stainless 304*	Stainless 316*	Stainless 347*
-50	1.00	1.00	1.00	1.00	1.00
70	1.00	1.00	1.00	1.00	1.00
200	0.98	0.98	0.88	0.95	0.95
300	0.95	-	0.82	0.92	0.93
400	0.94	-	0.78	0.89	0.90
500	0.93	-	0.75	0.86	0.90
600	0.92	-	0.73	0.84	0.90
650	0.89	-	0.71	0.82	0.90
700	0.87	-	0.70	0.82	0.90
750	0.84	-	0.69	0.81	0.90

CHART II
Temperature Derates for SWSI Size 80 & 89 Wheel Speed Limits

TEMP. °F	WHEEL MATERIAL		
	Steel	Stainless 316	Stainless 2205
70	1.00	0.64	0.85
120	0.98	0.63	0.82
200	0.97	0.61	0.79
300	0.94	0.58	0.76
400	0.91	0.56	0.73
500	0.88	0.54	0.70
600	0.85	0.53	0.68
700	0.81	0.52	-
750	0.79	0.51	-

CHART III
Altitude Correction Factors

Alt. Above Sea Level	FACTOR
0	1.00
500	1.02
1000	1.04
1500	1.06
2000	1.08
2500	1.10
3000	1.12
3500	1.14
4000	1.16
4500	1.18
5000	1.20
5500	1.22
6000	1.25
7000	1.30
7500	1.32
8000	1.35
9000	1.40
10000	1.45

CHART IV
Rarefication Correction Factors

Neg. Inlet Pressure "WG	FACTOR
15	1.04
20	1.05
25	1.07
30	1.08
35	1.09
40	1.11
45	1.12
50	1.14

CHART V
Temperature Correction Factors

TEMP. °F	FACTOR
-50	0.77
-25	0.82
0	0.87
20	0.97
40	0.94
60	0.98
70	1.00
80	1.02
100	1.06
120	1.09
140	1.13
160	1.17
180	1.21
200	1.25
225	1.29
250	1.34
275	1.39
300	1.43
325	1.48
350	1.53
375	1.58
400	1.62
450	1.72
500	1.81
550	1.91
600	2.00
650	2.10

NOTES: When more than one correction is made, the factors are combined by multiplying factors.
**PLR Fans only.*

FAN ENGINEERING & SELECTION

Maximum safe speeds are for standard wheel designs at 70°F. and are free of material build-up, corrosion, or wear. Fan operation at temperatures above 70°F. primarily affects the strength of rotating components, which declines as temperature increases. When alloy construction is specified or when temperatures are involved, multiply the appropriate safe operating speed shown below by the factor shown in Charts I & II on Page 24.

MAXIMUM WHEEL SAFE SPEEDS [RPM]												
Size	Class I			Class II			Class III			Class IV		
	ACF	PLR	BC	ACF	PLR	BC	ACF	PLR	BC	ACF	PLR	BC
10	4570	3990	-	4900	5195	-	-	-	-	-	-	-
12	3755	3280	-	4900	4270	-	-	-	-	-	-	-
13	3320	2920	-	4330	3800	-	-	-	-	-	-	-
15	2910	2580	-	3800	3360	-	-	-	-	-	-	-
16	2595	2330	-	3385	3090	-	4100	3830	-	-	-	-
18	2305	2100	2100	3005	2735	2735	3790	3525	-	4300	4300	-
20	3125	1930	-	2780	2510	2510	3510	3200	-	3895	3895	-
22	1970	1770	1770	2570	2305	2305	3240	2900	-	3520	3520	-
24	1790	1605	1605	2335	2090	2090	2940	2635	-	3205	3205	-
27	1540	1420	1420	2010	1850	1850	2530	2325	-	2905	2905	-
30	1385	1280	1280	1805	1665	1665	2275	2095	-	2610	2610	-
33	1265	1175	1175	1650	1515	1515	2080	1905	-	2375	2375	-
36	1110	1045	1045	1450	1360	1360	1825	1715	-	2145	2145	-
40	1005	950	950	1315	1235	1235	1655	1555	-	1945	1945	-
44	910	880	880	1190	1120	1120	1495	1410	-	1800	1800	-
49	850	780	780	1105	1020	1020	1395	1280	-	1600	1600	-
54	750	710	710	975	920	920	1230	1175	-	1445	1445	-
60	675	640	640	880	830	830	1110	1045	-	1305	1305	-
66	615	585	585	800	755	755	1010	950	-	1185	1185	-
73	555	530	530	725	685	685	915	880	-	1075	1075	-
80	500	475	-	650	615	-	825	780	-	970	970	-
83	450	430	-	590	560	-	750	705	-	880	880	-



www.nyb.com